WAIT AVENUE WALL REPLACEMENT
TOWN OF WAKE FOREST
NORTH CAROLINA

INDEX OF SHEETS

TITLE SHEET	T1	
WALL NO. 1	W1 1 OF 1 THRU W1 1 OF 3	STA. 10+54.15 -L- TO STA. 10+65.77 -L-
WALL NO. 2	W2 1 OF 1 THRU W1 1 OF 3	STA. 10+78.14 -L- TO STA. 11+01.65 -L-
WALL NO. 3	W3 1 OF 1 THRU W1 1 OF 3	STA. 11+06.64 -L- TO STA. 11+70.61 -L-
WALL NO. 4	W4 1 OF 1 THRU W1 1 OF 3	STA. 11+75.60 -L- TO STA. 11+93.47 -L-
WALL NO. 5	W5 1 OF 1 THRU W1 1 OF 3	STA. 12+06.35 -L- TO STA. 13+23.44 -L-
WALL NO. 6	W6 1 OF 1 THRU W1 1 OF 3	STA. 13+29.02 -L- TO STA. 13+95.67 -L-
WALL NO. 7	W7 1 OF 1 THRU W1 1 OF 3	STA. 14+18.29 -L- TO STA. 14+54.91 -L-
WALL NO. 8	W8 1 OF 1 THRU W1 1 OF 3	STA. 14+61.76 -L- TO STA. 15+01.54 -L-

NORTH CAROLINA PROFESSIONAL SEAL 22072 ENGINEER JOHN ARTHUR DUNWORTH
2-15-12

REVISIONS

NO.	DATE	DESCRIPTION	BY

559 Jones Franklin Rd. Suite 164
Raleigh, N.C. 27606
Bus: 919 851 8077
Fax: 919 851 8107
License No.: F-0377

WETHERILL ENGINEERING

TRANSPORTATION PLANNING/DESIGN - BRIDGE/STRUCTURE DESIGN
CIVIL/SITE DESIGN - GIS/GPS - CONSTRUCTION OBSERVATION

WALL REPLACEMENT

Wait Ave
Town of Wake Forest
North Carolina

DATE: 12 - 2011
SCALE: NTS
DRAWN BY: GFW
CHECKED BY: JAD
SHEET: T1
PROJ. NO.:

2/15/2012
8:04:46 AM
P:\2011\113600.06 Wait Ave Wake Forest\DGN\TITLE SHEET.dgn

CONTRACTOR IS RESPONSIBLE FOR LOCATING UTILITIES PRIOR TO CONSTRUCTION. IF THERE ARE ANY DEVIANCE FROM THE PLANS THE ENGINEER SHALL BE CONTACTED.

THE CONTRACTOR SHALL MAKE FIELD ADJUSTMENTS AS NECESSARY FOR HEIGHT AND LAYOUT OF WALL AS TO BEST FIT EXISTING FIELD CONDITIONS.

ALL CONSTRUCTION SHALL BE IN ACCORDANCE WITH TOWN OF WAKE FOREST STANDARDS AND SPECIFICATIONS.

SURVEY BY WK DICKSON & ASSOCIATES. ENGINEERS NOT RESPONSIBLE FOR THE ACCURACY OF THE SURVEY. THE CONTRACTOR SHALL FIELD VARIFY THE LOCATION OF ANY EXISTING CONSTRUCTION CONFLICTS AND NOTIFY ENGINEER OF ANY DEVIATION FROM THIS SURVEY.

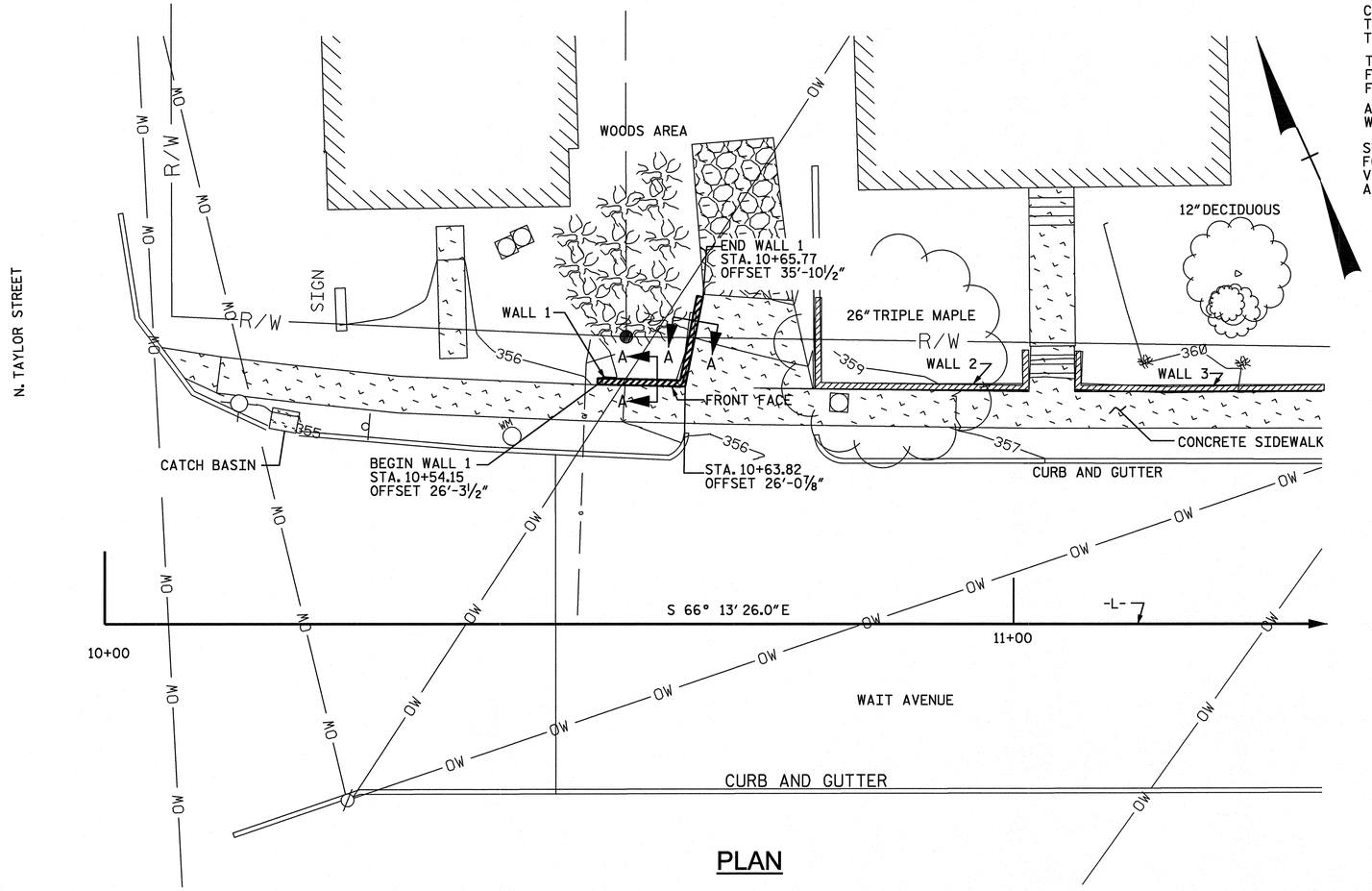

PLAN

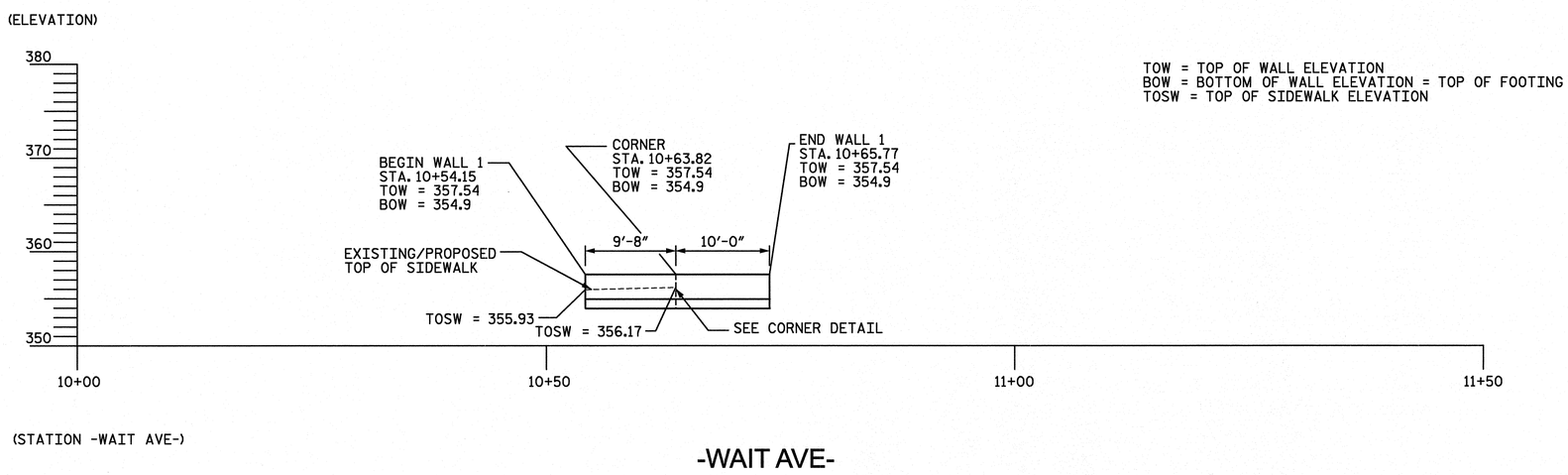

TOW = TOP OF WALL ELEVATION
BOW = BOTTOM OF WALL ELEVATION = TOP OF FOOTING
TOSW = TOP OF SIDEWALK ELEVATION

-WAIT AVE-

CANTILEVERED CONCRETE RETAINING WALL NO. 1 ELEVATION - FRONT FACE

REVISIONS

NO.	DATE	DESCRIPTION	BY

ETHERILL ENGINEERING
559 Jones Franklin Rd. Suite 164
Raleigh, N.C. 27606
Bus: 919 851 8077
Fax: 919 851 8107
License No.: F-0377

TRANSPORTATION PLANNING/DESIGN - BRIDGE/STRUCTURE DESIGN
CIVIL/SITE DESIGN - GIS/GPS - CONSTRUCTION OBSERVATION

WALL NO. 1 LAYOUT
Sta. 10+54.15 -L- to Sta. 10+65.77 -L-

Wait Ave
Town of Wake Forest
North Carolina

DATE: 12 - 2011
SCALE: NTS
DRAWN BY: GFW
CHECKED BY: JAD
SHEET: W1 1 OF 3
PROJ. NO.:

2/15/2012
9:07:23 AM
P:\2011\11360.06 Wait Ave Wake Forest\DGN\Wall 1.dgn

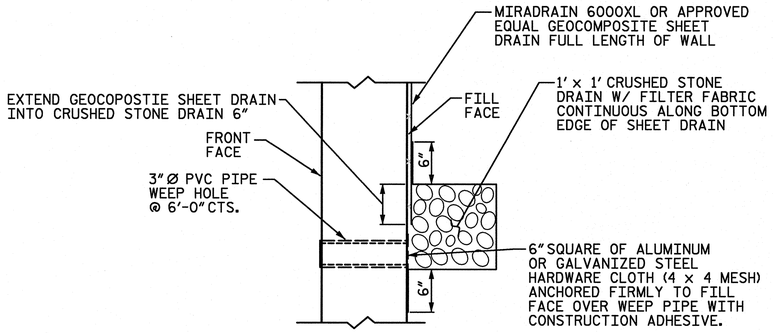

WALL DRAIN DETAIL

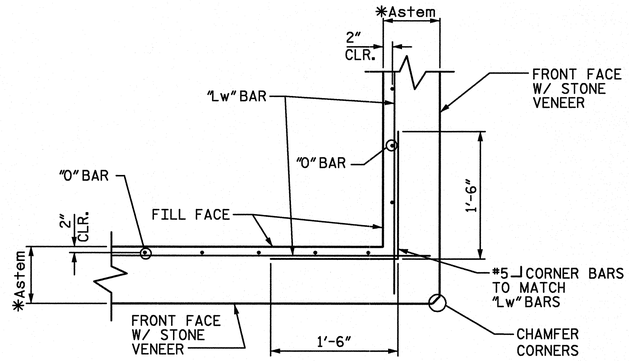

WALL CORNER DETAIL PLAN @ -L- STA. 10+63.82

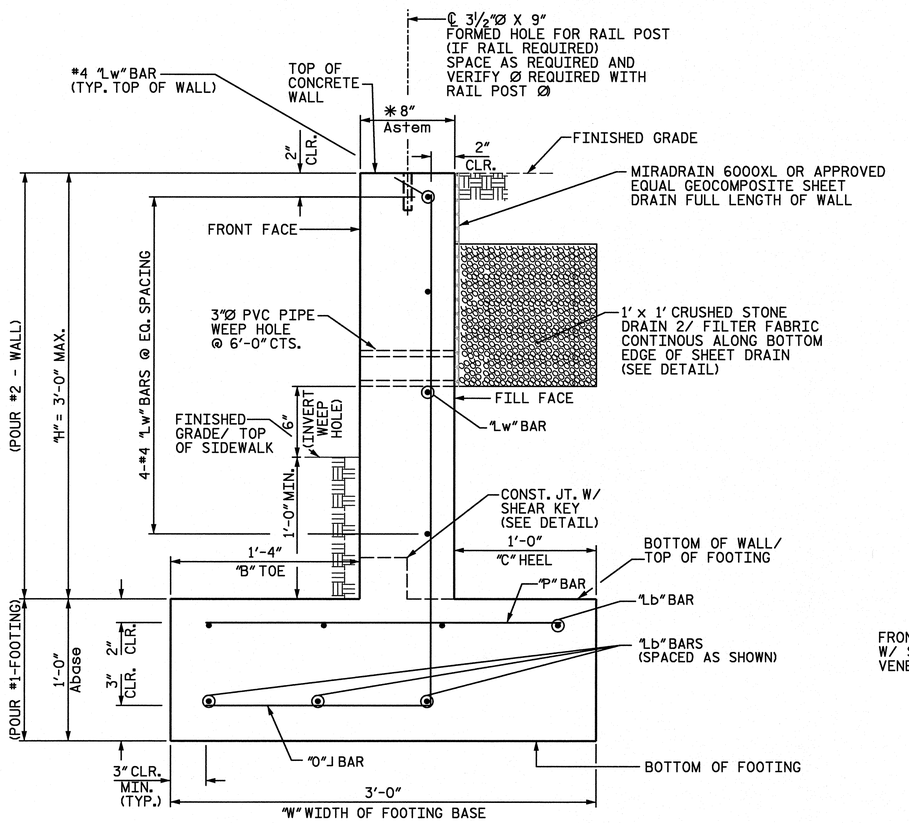

SECTION A-A

CANTILEVERED CONCRETE RETAINING WALL
STATION 10+54.65 -L TO STATION 10+65.41 -L-

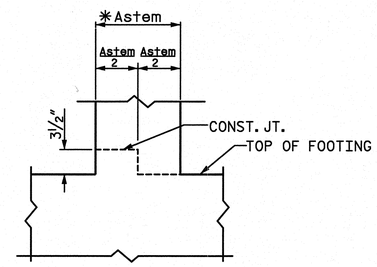

SHEAR KEY DETAIL

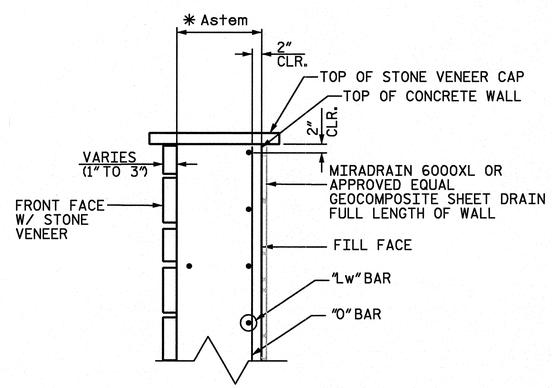

STONE VENEER FRONT FACE

GENERAL ENGINEERING NOTES

1. ALL APPLIED LOADS AND LOAD COMBINATIONS ARE IN ACCORDANCE WITH THE NORTH CAROLINA BUILDING CODE 2006 EDITION.
2. CONTRACTOR SHALL HAVE A GEOTECHNICAL ENGINEER FIELD VERIFY THE BEARING CAPACITY OF THE SOIL FOR THE WALL FOOTINGS. SOILS SHALL BE SUITABLE FOR PROVIDING THE REQUIRED BEARING CAPACITY OF 2,000 PSF WITH A MINIMUM FACTOR OF SAFETY OF 3.
3. DESIGN PARAMETERS:
   SOIL WEIGHT = 120 PCF
   EQUIVALENT FLUID PRESSURE = 45 PCF
   Ka = 0.375
   COEFFICIENT OF FRICTION = 0.32
   ALLOWABLE BEARING CAPACITY = 2,000 PSF
4. SITE PREPARATION AND SOIL CONDITIONING DURING CONSTRUCTION ARE THE RESPONSIBILITY OF THE CONTRACTOR.
5. THE MINIMUM 28 DAY COMPRESSION STRENGTH OF CONCRETE SHALL BE 3,000 PSI.
6. ALL REINFORCING STEEL SHALL BE ASTM A615, GRADE 60 DEFORMED BARS. FY=60 KSI. ALL REINFORCING SHALL BE PLACED IN ACCORDANCE WITH LATEST EDITION OF ACI318 AND ACI315. MINIMUM SPLICE LENGTHS SHALL BE 40 BAR DIAMETERS.
7. ALL CONTRACTION JOINTS (CONTROL JOINTS) SHALL BE NO GREATER THAN 25' APART. JOINT DEPTH SHALL BE 1" DEEP BY ¼" WIDE ON BOTH FACES.
8. CONTRACTOR SHALL CONSTRUCT THE WALL AS SHOWN IN THESE PLANS. ANY AND ALL MODIFICATIONS SHALL BE APPROVED BY THE ENGINEER IN WRITING PRIOR TO CONSTRUCTION.
9. CONTRACTOR SHALL BE RESPONSIBLE FOR COMPILING WITH ALL LOCAL, STATE AND FEDERAL REGULATIONS.
10. CONTRACTOR SHALL THOUROUGHLY REVIEW PLANS AND SPECIFICATIONS PRIOR TO CONSTRUCTION. REQUEST FOR ADDITIONAL INFORMATION AND CLARIFICATIONS SHALL BE MADE TO THE ENGINEER IN WRITING.
11. PVC PIPE SHALL BE SCHEDULE 40 AND SHALL CONFORM TO THE REQUIREMENTS OF THE ASTM D-1785.
12. GEOCOMPOSITE SHEET DRAIN SHALL BE MIRADRAIN 6000XL OR APPROVED EQUAL. GEOCOMPOSITE SHEET DRAIN SHALL BE INSTALLED IN ACCORDANCE WITH MANUFACTURER'S REQUIREMENTS.
13. UNLESS OTHERWISE NOTED ON THE PLANS, ALL EXPOSED CORNERS ON STRUCTURES SHALL BE CHAMFERED ¾".
14. EXISTING SIDEWALK IS TO BE REMOVED. PROPOSED SIDEWALK SHALL BE PLACED AT THE ELEVATION AND LOCATION OF THE PREVIOUS SIDEWALK.
15. A 42" TALL GUARDRAIL SHALL BE REQUIRED AT ALL LOCATIONS WHERE THE RETAINING WALL HEIGHT IS 30" OR GREATER ABOVE FINISHED GRADE.

* STEM THICKNESS (Astem) IS THICKNESS OF CONCRETE WALL ONLY. Astem DOES NOT INCLUDE THICKNESS OF STONE VENEER ON WALL FRONT FACE.

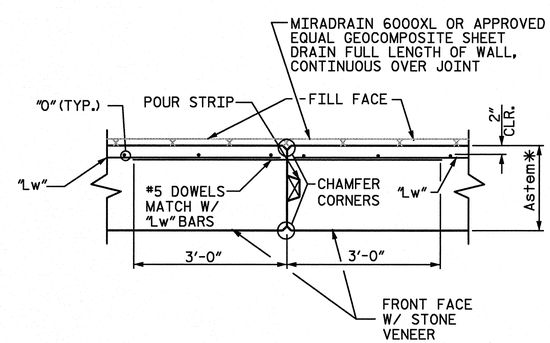

VERTICAL CONSTRUCTION JOINT WALL PLAN VIEW

NORTH CAROLINA PROFESSIONAL SEAL 22072 ENGINEER JOHN ARTHUR HOWARD
2-15-12

REVISIONS

NO.	DATE	DESCRIPTION	BY

WETHERILL ENGINEERING
559 Jones Franklin Rd. Suite 164
Raleigh, N.C. 27606
Bus: 919 851 8077
Fax: 919 851 8107
License No.: F-0377

TRANSPORTATION PLANNING/DESIGN - BRIDGE/STRUCTURE DESIGN
CIVIL/SITE DESIGN - GIS/GPS - CONSTRUCTION OBSERVATION

Wall NO. 1 Details
Sta. 10+54.15 -L- to Sta. 10+65.77 -L-

Wait Ave
Town of Wake Forest
North Carolina

DATE: 12 - 2011
SCALE: NTS
DRAWN BY: GFW
CHECKED BY: JAD
SHEET: W1-2 OF 3
PROJ. NO.:

2/15/2012
9:10:41 AM
P:\2011\11360.06 Wait Ave Wake Forest\DGN\Wall DETAILS 1.dgn

CANTILEVERED CONCRETE RETAINING WALL NO. 1

STATION TO STATION	CONCRETE DIMENSIONS & VOLUMES: OFFSET FROM -L-	WALL SECTION LENGTH	MAX. WALL HEIGHT ABOVE TOP OF FOOTING BASE (H)	* STEM THICKNESS (Astem)	TOE (B)	HEEL (C)	WIDTH OF BASE (W)	HEIGHT OF FOOTING (Abase)	KEY (T MIN. x K)	CONCRETE QUANTITY	ELEVATIONS: TOP OF WALL EL.	BOTTOM OF WALL /TOP OF FOOTING EL.	BOTTOM OF FOOTING EL.	STEM REINFORCEMENT: "O" BARS SIZE @ IN.	"Lw" BARS *BARS -SIZE	FOOTING REINFORCEMENT: "P" BARS *BARS -SIZE	"Lb" BARS *BARS -SIZE	"Kb" BARS SIZE @ IN.
-L- 10+54.15 TO 10+63.82	26'-3½" LT.	9'-8"	2.64'	8"	1'-4"	1'-0"	3'-0"	12"	——	1.7 CY	357.54 TO 357.54	354.9	353.9	#5 @ 8"	4 - #4	#5 @ 8"	7 - #4	——
10+63.82 TO 10+65.77 TO 35'-10½" LT.	26'-0⅞" LT.	10'-0"	2.64	8"	1'-4"	1'-0"	3'-0"	12"	——	1.8 CY	357.54 TO 357.54	354.9	353.9	#5 @ 8"	4 - #4	#5 @ 8"	7 - #4	——

* STEM THICKNESS (Astem) IS THICKNESS OF CONCRETE WALL ONLY. Astem DOES NOT INCLUDE THICKNESS OF STONE VENEER ON WALL FRONT FACE.

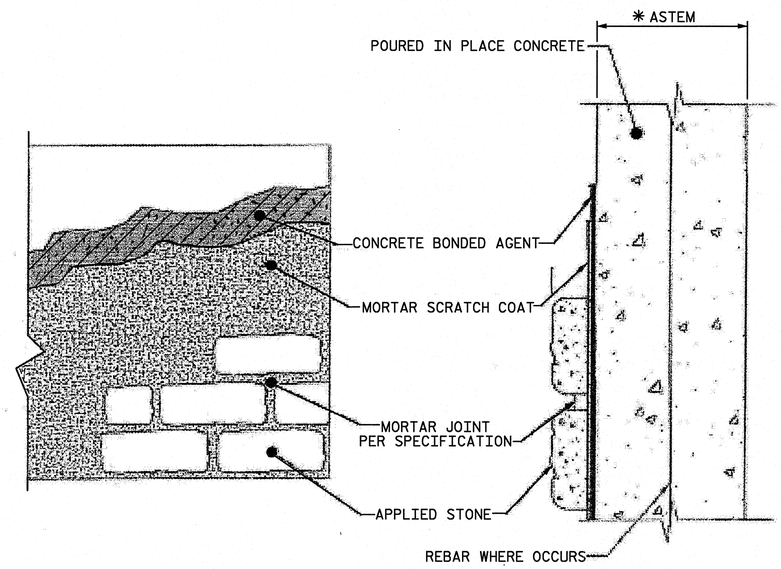

STONE VENEER INSTALLATION OVER POURED CONCRETE SURFACES

SPECIFICATIONS:

- CONCRETE BONDING AGENT: SURFACE APPLIED BONDING AGENTS THAT MEET ASTM C 1059 OR ASTM C 932. INTEGRALLY MIXED (IN MORTAR SCRATCH COAT) CAN BE USED SUCH THAT MORTAR ACHIEVES MINIMUM SHEAR BOND STRENGTH OF 50 PSI WHEN TESTED IN ACCORDANCE WITH ASTM C482. AS AN ALTERNATIVE TO CONCRETE BONDING AGENT, CORROSION RESISTANT MINIMUM 2.5 LBS. PER SQUARE YARD EXPANDED METAL LATH THAT COMPLIES WITH ASTM C 847 AND APPLIED WITH APPROPRIATE CONCRETE FASTNERS MAY BE USED. USE CONCRETE FASTENING PINS WITH WASHERS APPLIED WITH A POWDER ACTUATED FASTENING TOOL. PINS SHALL HAVE A MINIMUM SHANK LENGTH OF ¾IN. WITH A 0.145 IN. HEAD DIAMETER AND UTILIZE A 16 GAGE WASHER.
- MORTAR SCRATCH COAT AND MORTAR JOINTS (IF APPLICABLE), PROPORTIONS BY VOLUME:
  - PORTLAND TYPE I/II CEMENT ASTM C-150 (1 PART), MASOMRY TYPE-N CEMENT ASTM C-270 1 PART), MASONRY SAND ASTM C-144 (3 PARTS), WATER ADDED TO ACHIEVE FIRM, MOIST CONSISTENCY, PIGMENT (POWDER OR LIQUID) ASTM C979 OPTIONAL, OR
  - MASONRY TYPE-S CEMENT ASTM C270 (1 PART), MASONRY SAND ASTM C-144 (3 PARTS), WATER ADDED TO ACHIEVE FIRM, MOIST CONSISTENCY, PIGMENT (POWDER OR LIQUID) ASTM C979 OPTIONAL

NORTH CAROLINA PROFESSIONAL SEAL 22072 ENGINEER JOHN ARTHUR DAVIS
2-15-12

REVISIONS

NO.	DATE	DESCRIPTION	BY

WETHERILL ENGINEERING
559 Jones Franklin Rd. Suite 164
Raleigh, N.C. 27606
Bus: 919 851 8077
Fax: 919 851 8107
License No.: F-0377

TRANSPORTATION PLANNING/DESIGN - BRIDGE/STRUCTURE DESIGN
CIVIL/SITE DESIGN - GIS/GPS - CONSTRUCTION OBSERVATION

Wall NO. 1 Details
Sta. 10+54.15 -L- to Sta. 10+65.77 -L-

Wait Ave
Town of Wake Forest
North Carolina

DATE: 12 - 2011
SCALE: NTS
DRAWN BY: GFW
CHECKED BY: JAD
SHEET: W1-3 OF 3
PROJ. NO.:

2/15/2012
8:10:53 AM
P:\2011\113600.06 Wait Ave Wake Forest\DGN\Wall DETAILS 1.dgn

CONTRACTOR IS RESPONSIBLE FOR LOCATING UTILITIES PRIOR TO CONSTRUCTION. IF THERE ARE ANY DEVIANCE FROM THE PLANS THE ENGINEER SHALL BE CONTACTED.

THE CONTRACTOR SHALL MAKE FIELD ADJUSTMENTS AS NECESSARY FOR HEIGHT AND LAYOUT OF WALL AS TO BEST FIT EXISTING FIELD CONDITIONS.

ALL CONSTRUCTION SHALL BE IN ACCORDANCE WITH TOWN OF WAKE FOREST STANDARDS AND SPECIFICATIONS.

SURVEY BY WK DICKSON & ASSOCIATES. ENGINEERS NOT RESPONSIBLE FOR THE ACCURACY OF THE SURVEY. THE CONTRACTOR SHALL FIELD VARIFY THE LOCATION OF ANY EXISTING CONSTRUCTION CONFLICTS AND NOTIFY ENGINEER OF ANY DEVIATION FROM THIS SURVEY.

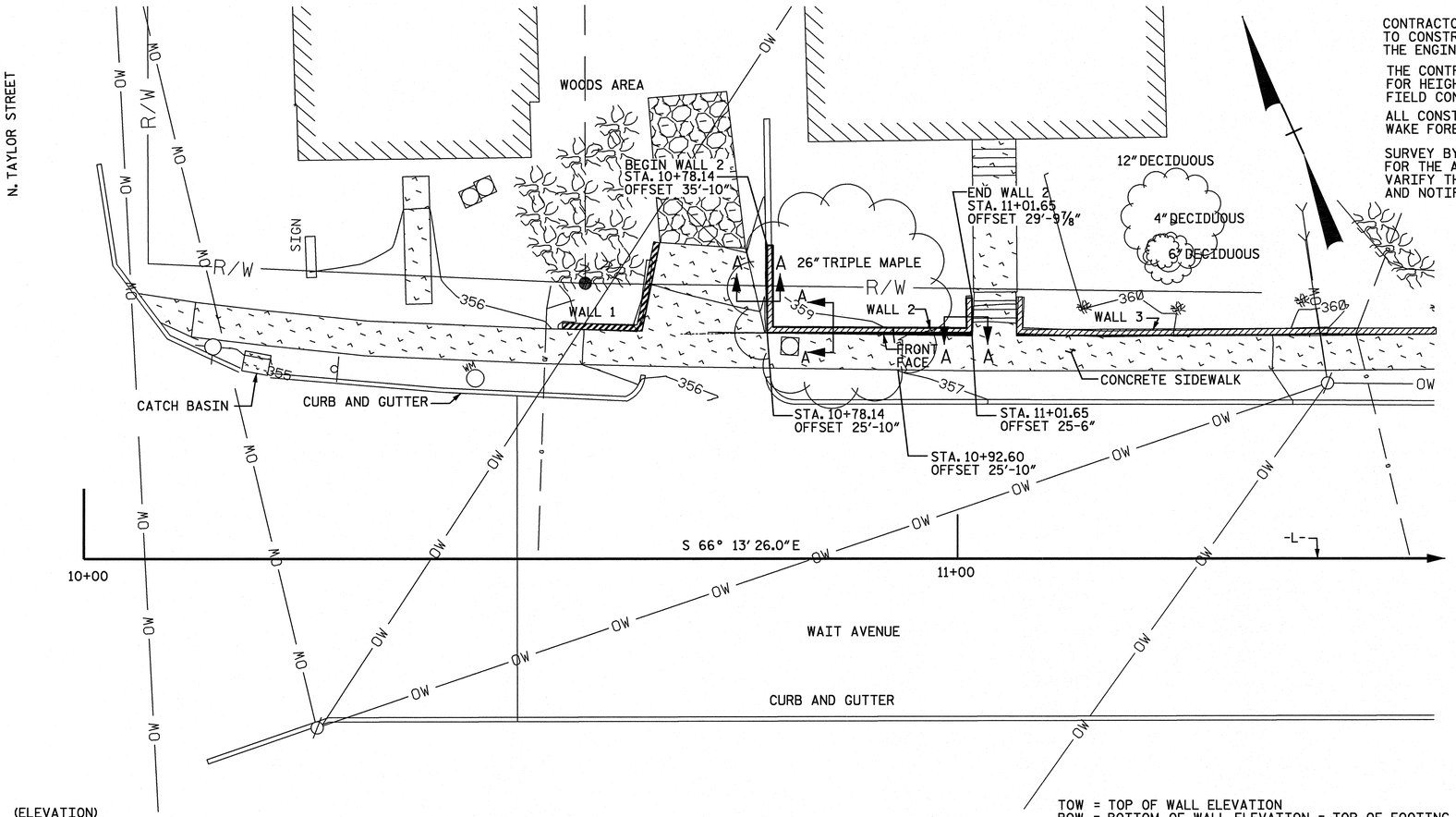

TOW = TOP OF WALL ELEVATION
BOW = BOTTOM OF WALL ELEVATION = TOP OF FOOTING
TOSW = TOP OF SIDEWALK ELEVATION

PLAN

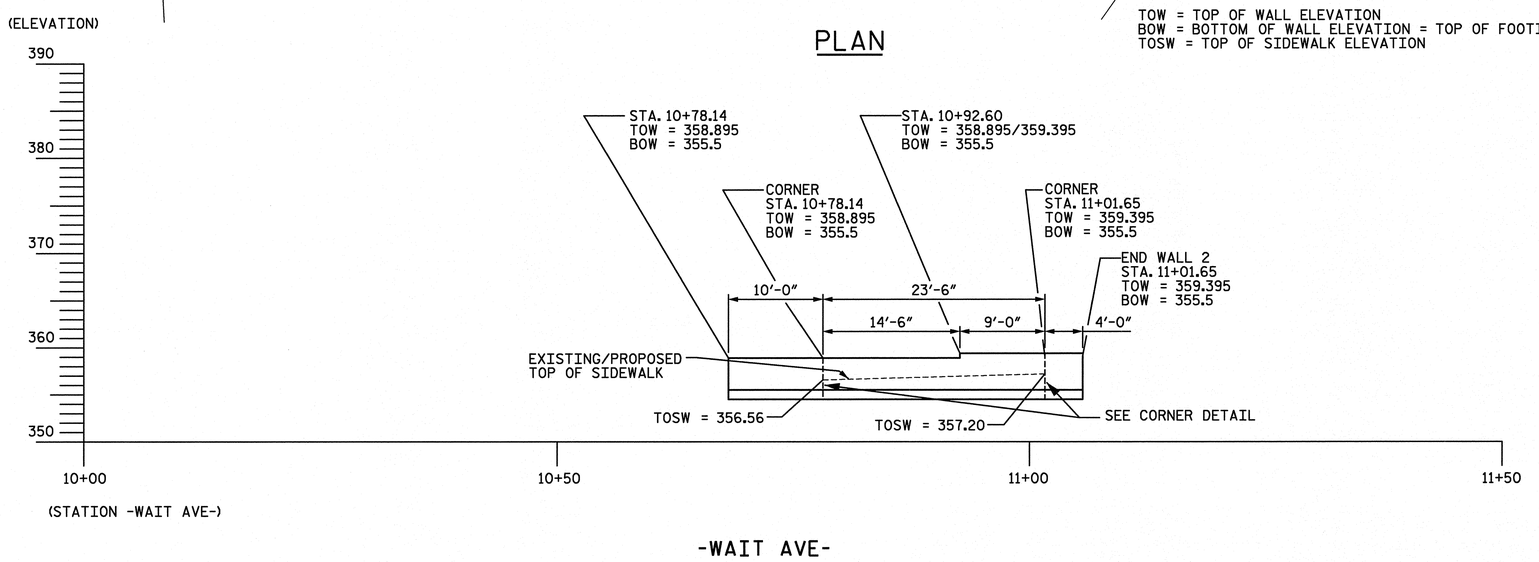

CANTILEVERED CONCRETE RETAINING WALL NO. 2 ELEVATION - FRONT FACE

NORTH CAROLINA PROFESSIONAL SEAL 22072 ENGINEER JOHN ARTHUR DUNCAN SMITH 2-15-12

REVISIONS			
NO.	DATE	DESCRIPTION	BY

559 Jones Franklin Rd. Suite 164
Raleigh, N.C. 27606
Bus: 919 851 8077
Fax: 919 851 8107
License No.: F-0377

ETHERILL ENGINEERING

TRANSPORTATION PLANNING/DESIGN - BRIDGE/STRUCTURE DESIGN
CIVIL/SITE DESIGN - GIS/GPS - CONSTRUCTION OBSERVATION

WALL NO. 2 LAYOUT
Sta. 10+78.14 -L- to Sta. 11+01.65 -L-

Wait Ave
Town of Wake Forest
North Carolina

DATE: 12 - 2011
SCALE:
DRAWN BY: GFW
CHECKED BY: JAD
SHEET: W2 1 OF 3
PROJ. NO.:

2/15/2012
9:11:21 AM
P:\2011\11360.06 Wait Ave Wake Forest\DGN\Wall 2.dgn

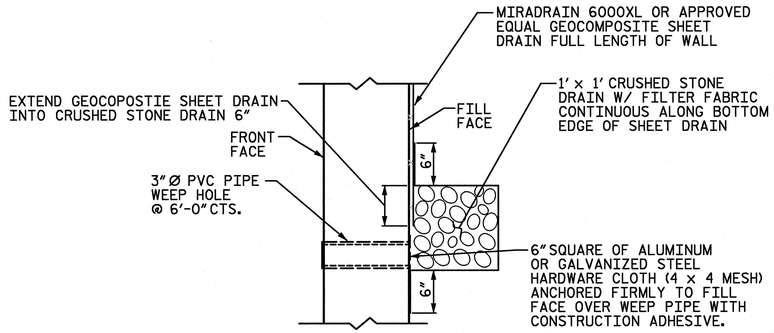

WALL DRAIN DETAIL

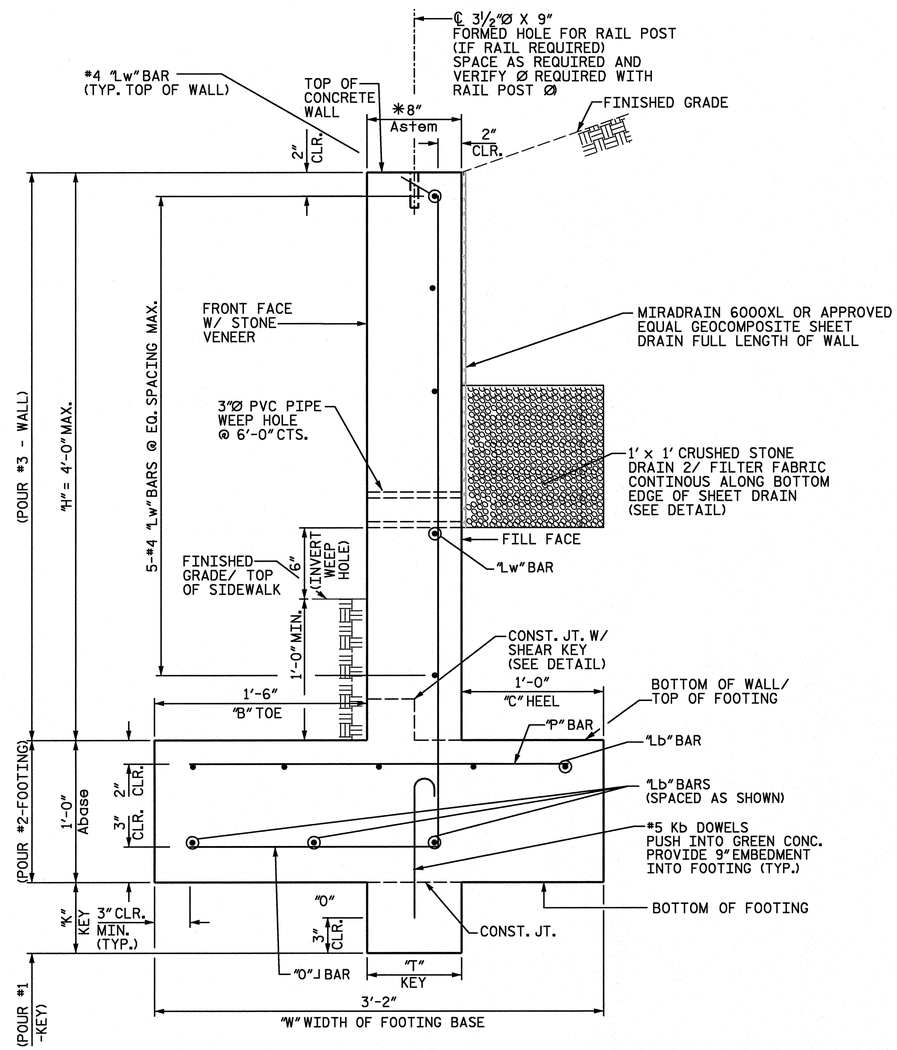

SECTION A-A

CANTILEVERED CONCRETE RETAINING WALL
STATION 10+78.14 -L- TO STATION 11+01.65 -L-

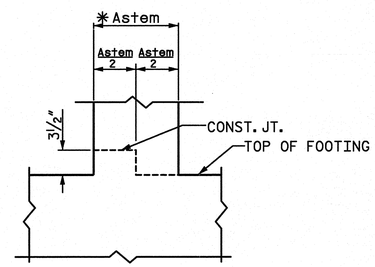

SHEAR KEY DETAIL

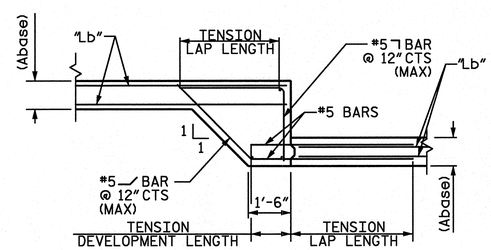

FOOTING STEP DETAIL

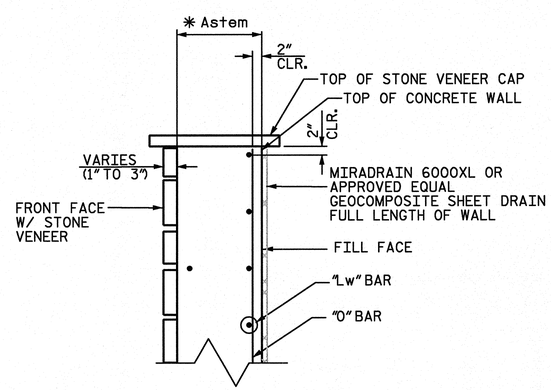

STONE VENEER FRONT FACE

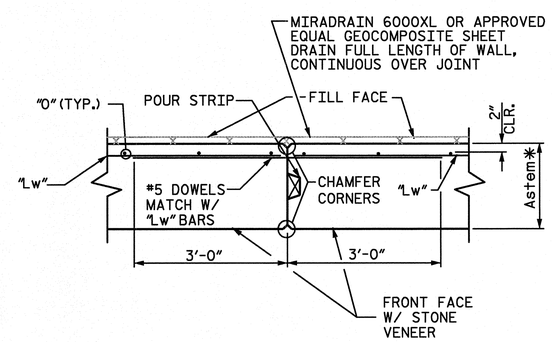

VERTICAL CONSTRUCTION JOINT WALL PLAN VIEW

GENERAL ENGINEERING NOTES

1. ALL APPLIED LOADS AND LOAD COMBINATIONS ARE IN ACCORDANCE WITH THE NORTH CAROLINA BUILDING CODE 2006 EDITION AND 17TH EDITION OF AASHTO STANDARD SPECIFICATIONS FOR HIGHWAY BRIDGES.
2. CONTRACTOR SHALL HAVE A GEOTECHNICAL ENGINEER FIELD VERIFY THE BEARING CAPACITY OF THE SOIL FOR THE WALL FOOTINGS. SOILS SHALL BE SUITABLE FOR PROVIDING THE REQUIRED BEARING CAPACITY OF 2,000 PSF WITH A MINIMUM FACTOR OF SAFETY OF 3.
3. DESIGN PARAMETERS:
   SOIL WEIGHT = 120 PCF
   EQUIVALENT FLUID PRESSURE = 45 PCF
   Ka = 0.375
   COEFFICIENT OF FRICTION = 0.32
   ALLOWABLE BEARING CAPACITY = 2,000 PSF
4. SITE PREPARATION AND SOIL CONDITIONING DURING CONSTRUCTION ARE THE RESPONSIBILITY OF THE CONTRACTOR.
5. THE MINIMUM 28 DAY COMPRESSION STRENGTH OF CONCRETE SHALL BE 3,000 PSI.
6. ALL REINFORCING STEEL SHALL BE ASTM A615, GRADE 60 DEFORMED BARS. FY=60 KSI. ALL REINFORCING SHALL BE PLACED IN ACCORDANCE WITH LATEST EDITION OF ACI318 AND ACI315. MINIMUM SPLICE LENGTHS SHALL BE 40 BAR DIAMETERS.
7. ALL CONTRACTION JOINTS (CONTROL JOINTS) SHALL BE NO GREATER THAN 25' APART. JOINT DEPTH SHALL BE 1" DEEP BY ¼" WIDE ON BOTH FACES.
8. CONTRACTOR SHALL CONSTRUCT THE WALL AS SHOWN IN THESE PLANS. ANY AND ALL MODIFICATIONS SHALL BE APPROVED BY THE ENGINEER IN WRITING PRIOR TO CONSTRUCTION.
9. CONTRACTOR SHALL BE RESPONSIBLE FOR COMPILING WITH ALL LOCAL, STATE AND FEDERAL REGULATIONS.
10. CONTRACTOR SHALL THOUROUGHLY REVIEW PLANS AND SPECIFICATIONS PRIOR TO CONSTRUCTION. REQUEST FOR ADDITIONAL INFORMATION AND CLARIFICATIONS SHALL BE MADE TO THE ENGINEER IN WRITING.
11. PVC PIPE SHALL BE SCHEDULE 40 AND SHALL CONFORM TO THE REQUIREMENTS OF THE ASTM D-1785.
12. GEOCOMPOSITE SHEET DRAIN SHALL BE MIRADRAIN 6000XL OR APPROVED EQUAL. GEOCOMPOSITE SHEET DRAIN SHALL BE INSTALLED IN ACCORDANCE WITH MANUFACTURER'S REQUIREMENTS.
13. UNLESS OTHERWISE NOTED ON THE PLANS, ALL EXPOSED CORNERS ON STRUCTURES SHALL BE CHAMFERED ¾".
14. EXISTING SIDEWALK IS TO BE REMOVED. PROPOSED SIDEWALK SHALL BE PLACED AT THE ELEVATION AND LOCATION OF THE PREVIOUS SIDEWALK.
15. A 42" TALL GUARDRAIL SHALL BE REQUIRED AT ALL LOCATIONS WHERE THE RETAINING WALL HEIGHT IS 30" OR GREATER ABOVE FINISHED GRADE.

* STEM THICKNESS (Astem) IS THICKNESS OF CONCRETE WALL ONLY. Astem DOES NOT INCLUDE THICKNESS OF STONE VENEER ON WALL FRONT FACE.

NORTH CAROLINA PROFESSIONAL SEAL 22072 ENGINEER JOHN ARTHUR DILLWORTH
2-15-12

REVISIONS

NO.	DATE	DESCRIPTION	BY

ETHERILL ENGINEERING
559 Jones Franklin Rd. Suite 164
Raleigh, N.C. 27606
Bus: 919 851 8077
Fax: 919 851 8107
License No.: F-0377

TRANSPORTATION PLANNING/DESIGN - BRIDGE/STRUCTURE DESIGN
CIVIL/SITE DESIGN - GIS/GPS - CONSTRUCTION OBSERVATION

Wall NO. 2 Details
Sta. 10+78.14 -L- to Sta. 11+01.65 -L-

Wait Ave
Town of Wake Forest
North Carolina

DATE: 12 - 2011
SCALE:
DRAWN BY: GFW
CHECKED BY: JAD
SHEET: W2-2 OF 3
PROJ. NO.:

2/15/2012
8:11:53 AM
P:\2011\11360.06 Wait Ave Wake Forest\DGN\Wall DETAILS 2.dgn

CANTILEVERED CONCRETE RETAINING WALL NO. 2

STATION TO STATION	CONCRETE DIMENSIONS & VOLUMES: OFFSET FROM -L-	WALL SECTION LENGTH	MAX. WALL HEIGHT ABOVE TOP OF FOOTING BASE (H)	* STEM THICKNESS (Astem)	TOE (B)	HEEL (C)	WIDTH OF BASE (W)	HEIGHT OF FOOTING (Abase)	KEY (T MIN. x K)	CONCRETE QUANTITY	ELEVATIONS: TOP OF WALL EL.	BOTTOM OF WALL /TOP OF FOOTING EL.	BOTTOM OF FOOTING EL.	STEM REINFORCEMENT: "O" BARS SIZE @ IN.	"Lw" BARS *BARS -SIZE	FOOTING REINFORCEMENT: "P" BARS SIZE @ IN.	"Lb" BARS *BARS -SIZE	"Kb" BARS SIZE @ IN.
-L- 10+78.14 TO 10+78.14	35'-10" LT.	10'-0"	3.40'	8"	1'-6"	1'-0"	3'-2"	12"	8"x6"	2.1 CY	358.9 TO 358.9	355.5	354.5	#5 @ 8"	5 - #4	#5 @ 8"	8 - #4	#5 @ 1'-4"
10+78.14 TO 10+92.60	25'-10" LT.	14'-6"	3.40'	8"	1'-6"	1'-0"	3'-2"	12"	8"x6"	3.1 CY	358.9 TO 358.9	355.5	354.5	#5 @ 8"	5 - #4	#5 @ 8"	8 - #4	#5 @ 1'-4"
10+92.60 TO 11+01.65	25'-10" LT.	9'-0"	3.90'	8"	1'-6"	1'-0"	3'-2"	12"	8"x6"	2.0 CY	359.4 TO 359.4	355.5	354.5	#5 @ 8"	5 - #4	#5 @ 8"	8 - #4	#5 @ 1'-4"
11+01.65 TO 11+01.65	25'-6" LT. TO 30'-1" LT.	4'-0"	3.90'	8"	1'-6"	1'-0"	3'-2"	12"	——	0.9 CY	359.4 TO 359.4	355.5	354.5	#5 @ 8"	5 - #4	#5 @ 8"	8 - #4	#5 @ 1'-4"

* STEM THICKNESS (Astem) IS THICKNESS OF CONCRETE WALL ONLY. Astem DOES NOT INCLUDE THICKNESS OF STONE VENEER ON WALL FRONT FACE.

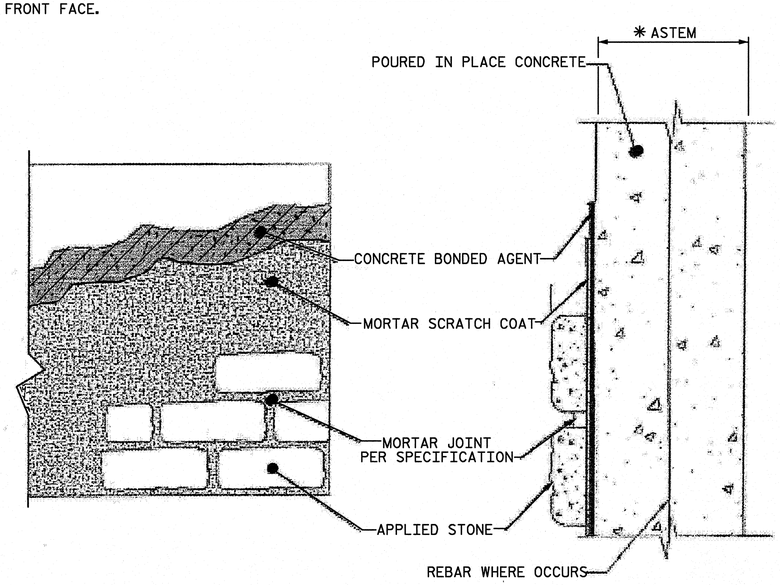

STONE VENEER INSTALLATION OVER POURED CONCRETE SURFACES

SPECIFICATIONS:

- CONCRETE BONDING AGENT: SURFACE APPLIED BONDING AGENTS THAT MEET ASTM C 1059 OR ASTM C 932. INTEGRALLY MIXED (IN MORTAR SCRATCH COAT) CAN BE USED SUCH THAT MORTAR ACHIEVES MINIMUM SHEAR BOND STRENGTH OF 50 PSI WHEN TESTED IN ACCORDANCE WITH ASTM C482. AS AN ALTERNATIVE TO CONCRETE BONDING AGENT, CORROSION RESISTANT MINIMUM 2.5 LBS. PER SQUARE YARD EXPANDED METAL LATH THAT COMPLIES WITH ASTM C 847 AND APPLIED WITH APPROPRIATE CONCRETE FASTNERS MAY BE USED. USE CONCRETE FASTENING PINS WITH WASHERS APPLIED WITH A POWDER ACTUATED FASTENING TOOL. PINS SHALL HAVE A MINIMUM SHANK LENGTH OF ¾IN. WITH A 0.145 IN. HEAD DIAMETER AND UTILIZE A 16 GAGE WASHER.
- MORTAR SCRATCH COAT AND MORTAR JOINTS (IF APPLICABLE), PROPORTIONS BY VOLUME:
  - PORTLAND TYPE I/II CEMENT ASTM C-150 (1 PART), MASOMRY TYPE-N CEMENT ASTM C-270 1 PART), MASONRY SAND ASTM C-144 (3 PARTS), WATER ADDED TO ACHIEVE FIRM, MOIST CONSISTENCY, PIGMENT (POWDER OR LIQUID) ASTM C979 OPTIONAL, OR
  - MASONRY TYPE-S CEMENT ASTM C270 (1 PART), MASONRY SAND ASTM C-144 (3 PARTS), WATER ADDED TO ACHIEVE FIRM, MOIST CONSISTENCY, PIGMENT (POWDER OR LIQUID) ASTM C979 OPTIONAL

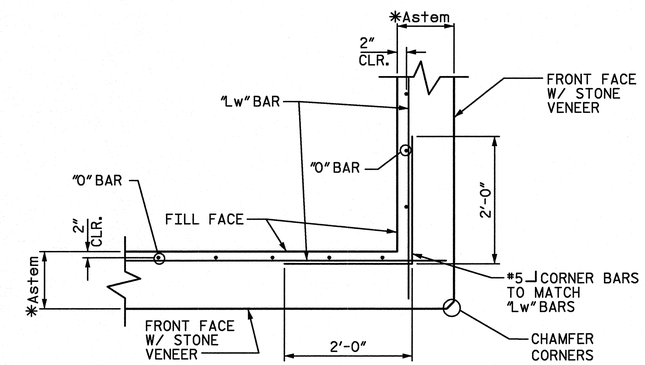

WALL CORNER DETAIL PLAN @ -L- STA. 10+78.14 & 11+01.65

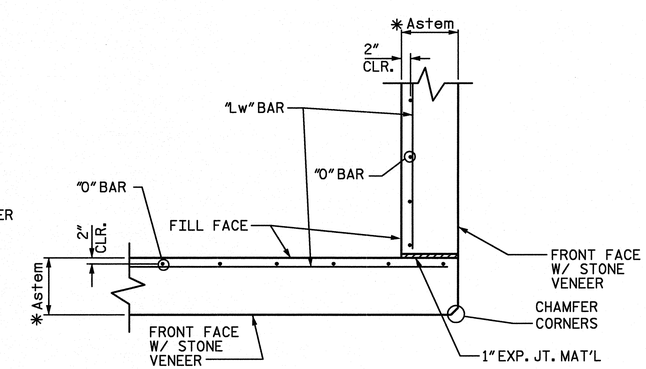

OPTIONAL-WALL CORNER DETAIL PLAN @ -L- STA. 10+78.14 & 11+01.65

REVISIONS

NO.	DATE	DESCRIPTION	BY

559 Jones Franklin Rd. Suite 164
Raleigh, N.C. 27606
Bus: 919 851 8077
Fax: 919 851 8107
License No.: F-0377
ETHERILL ENGINEERING

TRANSPORTATION PLANNING/DESIGN - BRIDGE/STRUCTURE DESIGN
CIVIL/SITE DESIGN - GIS/GPS - CONSTRUCTION OBSERVATION

Wall NO. 2 Details
Sta. 10+78.14 -L- to Sta. 11+01.65-L-

Wait Ave
Town of Wake Forest
North Carolina

DATE: 12 - 2011
SCALE:
DRAWN BY: GFW
CHECKED BY: JAD
SHEET: W2-3 OF 3
PROJ. NO.:

2/15/2012
3:12:04 AM
P:\2011\11360.06 Wait Ave Wake Forest\DGN\Wall DETAILS 2.dgn

CONTRACTOR IS RESPONSIBLE FOR LOCATING UTILITIES PRIOR TO CONSTRUCTION. IF THERE ARE ANY DEVIANCE FROM THE PLANS THE ENGINEER SHALL BE CONTACTED.

THE CONTRACTOR SHALL MAKE FIELD ADJUSTMENTS AS NECESSARY FOR HEIGHT AND LAYOUT OF WALL AS TO BEST FIT EXISTING FIELD CONDITIONS.

ALL CONSTRUCTION SHALL BE IN ACCORDANCE WITH TOWN OF WAKE FOREST STANDARDS AND SPECIFICATIONS.

SURVEY BY WK DICKSON & ASSOCIATES. ENGINEERS NOT RESPONSIBLE FOR THE ACCURACY OF THE SURVEY. THE CONTRACTOR SHALL FIELD VARIFY THE LOCATION OF ANY EXISTING CONSTRUCTION CONFLICTS AND NOTIFY ENGINEER OF ANY DEVIATION FROM THIS SURVEY.

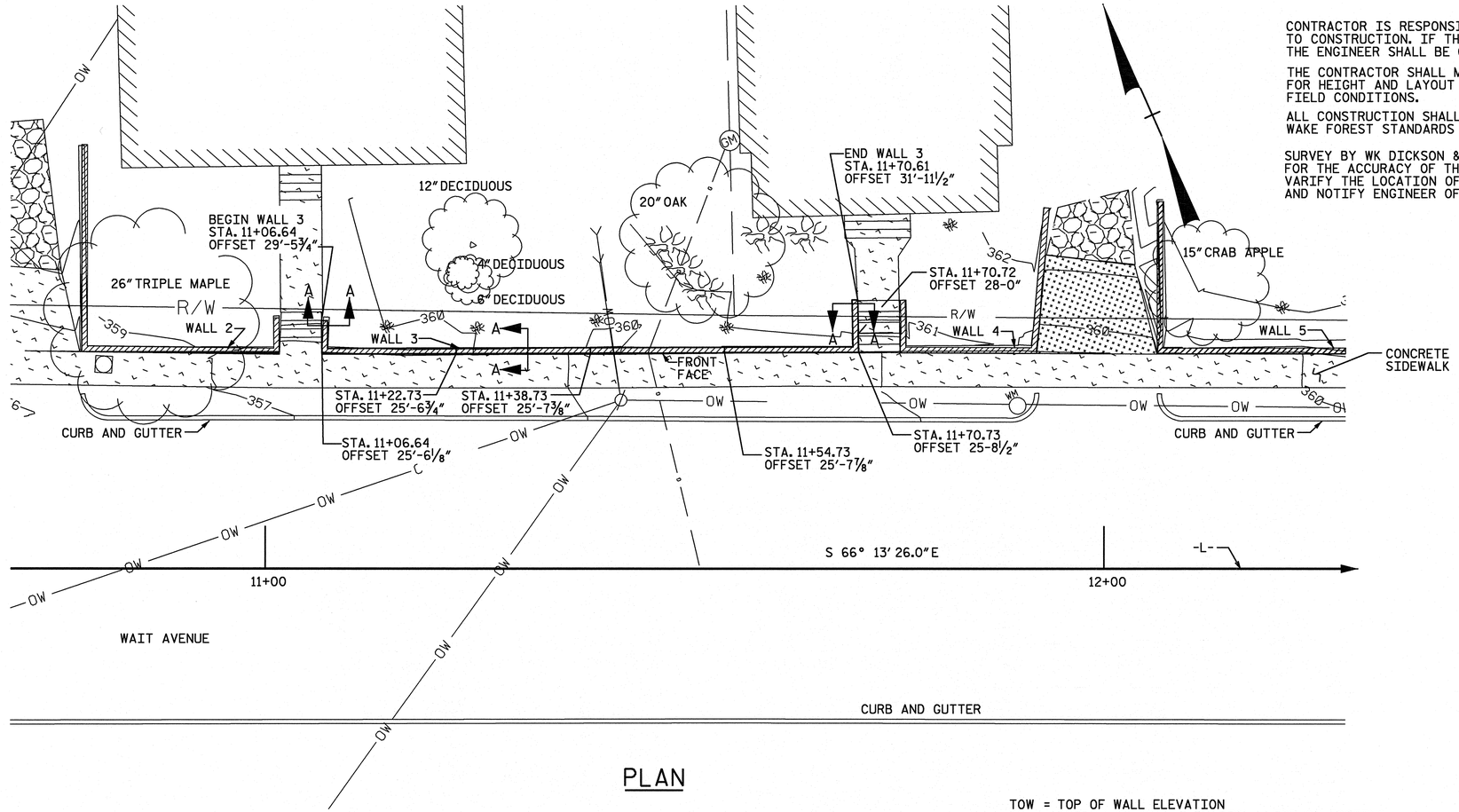

PLAN

TOW = TOP OF WALL ELEVATION
BOW = BOTTOM OF WALL ELEVATION = TOP OF FOOTING
TOSW = TOP OF SIDEWALK ELEVATION

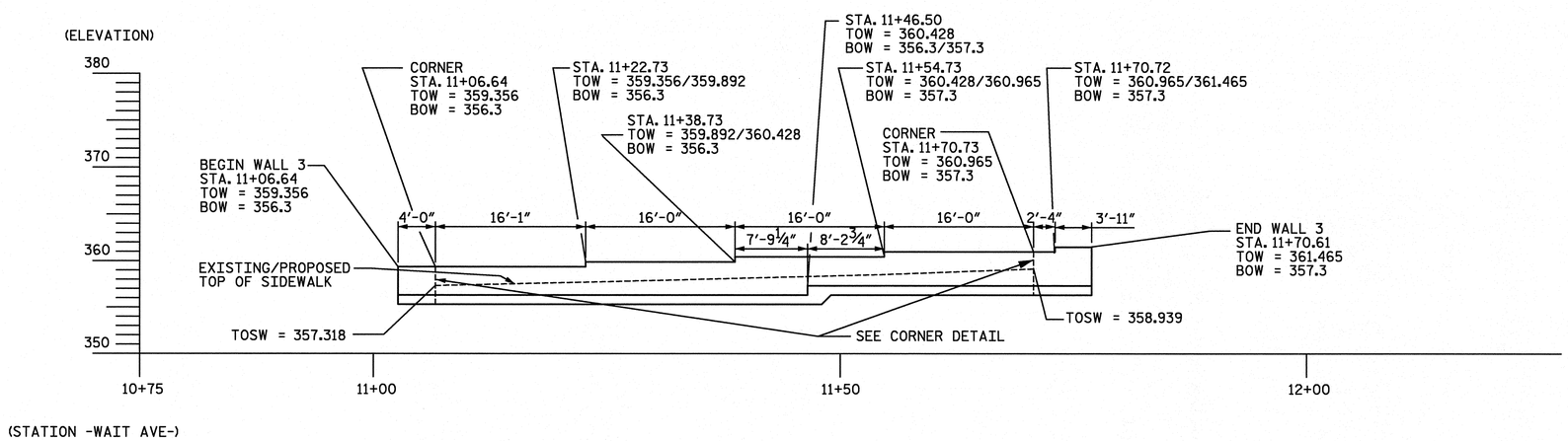

CANTILEVERED CONCRETE RETAINING WALL NO. 3 ELEVATION - FRONT FACE

REVISIONS

NO.	DATE	DESCRIPTION	BY

559 Jones Franklin Rd. Suite 164
Raleigh, N.C. 27606
Bus: 919 851 8077
Fax: 919 851 8107
License No.: F-0377

WETHERILL ENGINEERING

TRANSPORTATION PLANNING/DESIGN - BRIDGE/STRUCTURE DESIGN
CIVIL/SITE DESIGN - GIS/GPS - CONSTRUCTION OBSERVATION

WALL NO. 3 LAYOUT
Sta. 11+06.64 -L- to Sta. 11+70.61 -L-

Wait Ave
Town of Wake Forest
North Carolina

DATE: 12 - 2011
SCALE: NTS
DRAWN BY: GFW
CHECKED BY: JAD
SHEET: W3 1 OF 3
PROJ. NO.:

2/15/2012
9:14:37 AM
P:\2011\11360.06 Wait Ave Wake Forest\DGN\Wall 3.dgn

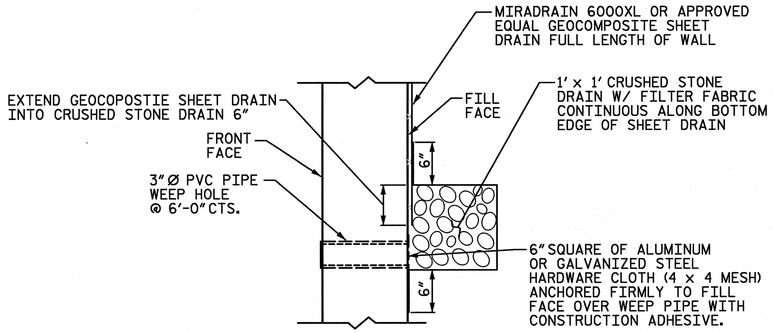

WALL DRAIN DETAIL

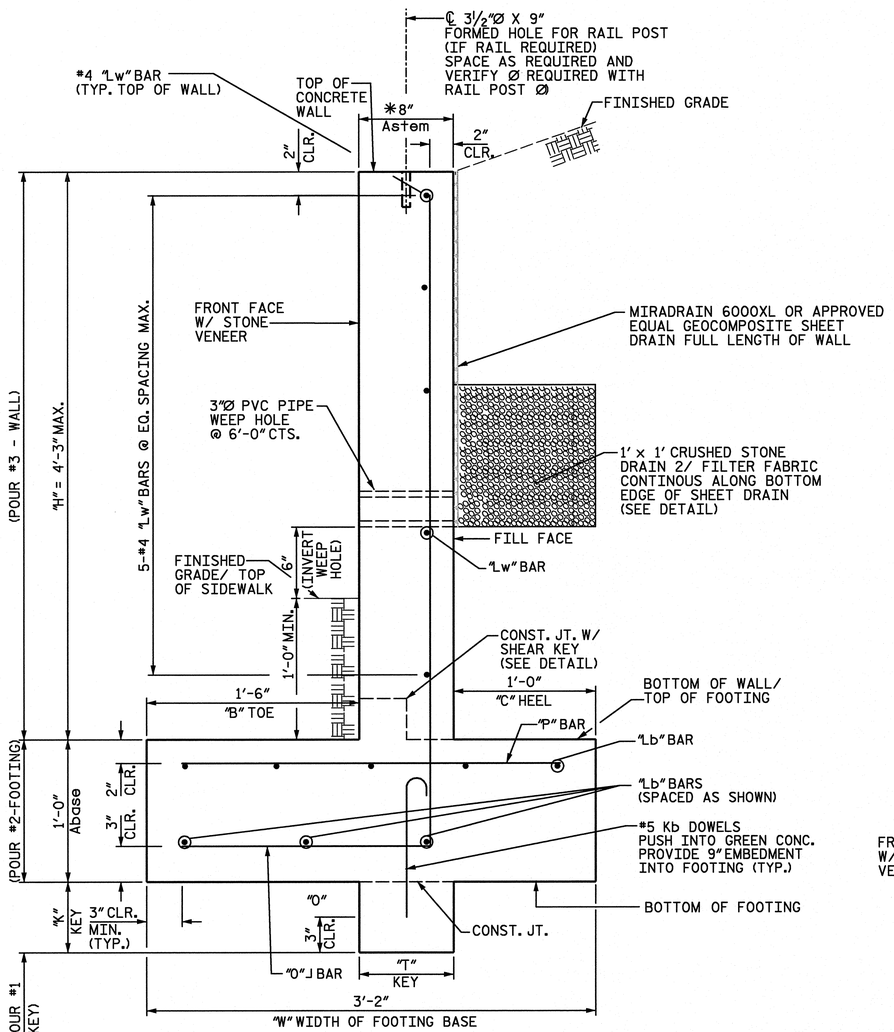

SECTION A-A

CANTILEVERED CONCRETE RETAINING WALL
STATION 11+06.75 -L- TO STATION 11+70.61 -L-

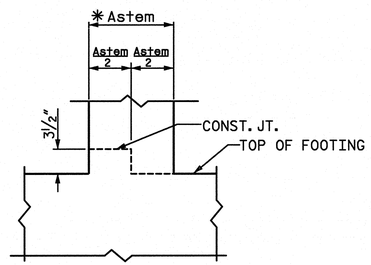

SHEAR KEY DETAIL

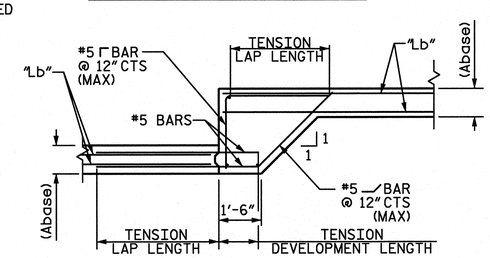

FOOTING STEP DETAIL

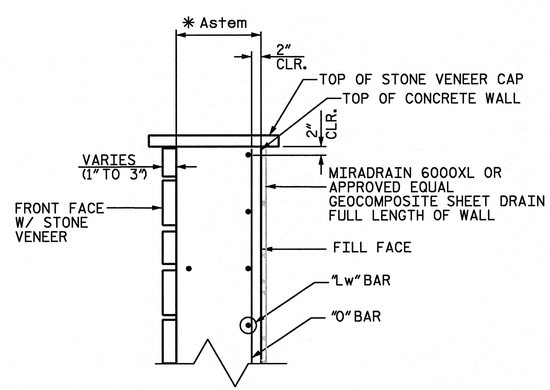

STONE VENEER FRONT FACE

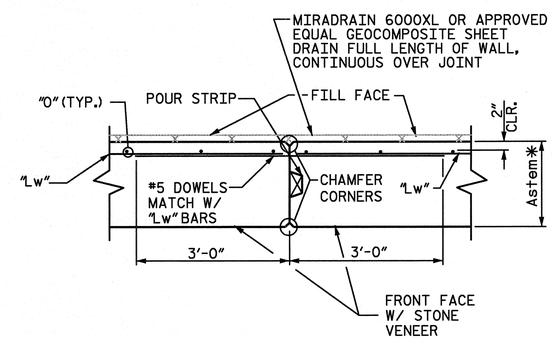

VERTICAL CONSTRUCTION JOINT WALL PLAN VIEW

GENERAL ENGINEERING NOTES

1. ALL APPLIED LOADS AND LOAD COMBINATIONS ARE IN ACCORDANCE WITH THE NORTH CAROLINA BUILDING CODE 2006 EDITION AND 17TH EDITION OF AASHTO STANDARD SPECIFICATIONS FOR HIGHWAY BRIDGES.
2. CONTRACTOR SHALL HAVE A GEOTECHNICAL ENGINEER FIELD VERIFY THE BEARING CAPACITY OF THE SOIL FOR THE WALL FOOTINGS. SOILS SHALL BE SUITABLE FOR PROVIDING THE REQUIRED BEARING CAPACITY OF 2,000 PSF WITH A MINIMUM FACTOR OF SAFETY OF 3.
3. DESIGN PARAMETERS:
   SOIL WEIGHT = 120 PCF
   EQUIVALENT FLUID PRESSURE = 45 PCF
   Ka = 0.375
   COEFFICIENT OF FRICTION = 0.32
   ALLOWABLE BEARING CAPACITY = 2,000 PSF
4. SITE PREPARATION AND SOIL CONDITIONING DURING CONSTRUCTION ARE THE RESPONSIBILITY OF THE CONTRACTOR.
5. THE MINIMUM 28 DAY COMPRESSION STRENGTH OF CONCRETE SHALL BE 3,000 PSI.
6. ALL REINFORCING STEEL SHALL BE ASTM A615, GRADE 60 DEFORMED BARS. FY=60 KSI. ALL REINFORCING SHALL BE PLACED IN ACCORDANCE WITH LATEST EDITION OF ACI318 AND ACI315. MINIMUM SPLICE LENGTHS SHALL BE 40 BAR DIAMETERS.
7. ALL CONTRACTION JOINTS (CONTROL JOINTS) SHALL BE NO GREATER THAN 25' APART. JOINT DEPTH SHALL BE 1" DEEP BY ¼" WIDE ON BOTH FACES.
8. CONTRACTOR SHALL CONSTRUCT THE WALL AS SHOWN IN THESE PLANS. ANY AND ALL MODIFICATIONS SHALL BE APPROVED BY THE ENGINEER IN WRITING PRIOR TO CONSTRUCTION.
9. CONTRACTOR SHALL BE RESPONSIBLE FOR COMPILING WITH ALL LOCAL, STATE AND FEDERAL REGULATIONS.
10. CONTRACTOR SHALL THOUROUGHLY REVIEW PLANS AND SPECIFICATIONS PRIOR TO CONSTRUCTION. REQUEST FOR ADDITIONAL INFORMATION AND CLARIFICATIONS SHALL BE MADE TO THE ENGINEER IN WRITING.
11. PVC PIPE SHALL BE SCHEDULE 40 AND SHALL CONFORM TO THE REQUIREMENTS OF THE ASTM D-1785.
12. GEOCOMPOSITE SHEET DRAIN SHALL BE MIRADRAIN 6000XL OR APPROVED EQUAL. GEOCOMPOSITE SHEET DRAIN SHALL BE INSTALLED IN ACCORDANCE WITH MANUFACTURER'S REQUIREMENTS.
13. UNLESS OTHERWISE NOTED ON THE PLANS, ALL EXPOSED CORNERS ON STRUCTURES SHALL BE CHAMFERED ¾".
14. EXISTING SIDEWALK IS TO BE REMOVED. PROPOSED SIDEWALK SHALL BE PLACED AT THE ELEVATION AND LOCATION OF THE PREVIOUS SIDEWALK.
15. A 42" TALL GUARDRAIL SHALL BE REQUIRED AT ALL LOCATIONS WHERE THE RETAINING WALL HEIGHT IS 30" OR GREATER ABOVE FINISHED GRADE.

* STEM THICKNESS (Astem) IS THICKNESS OF CONCRETE WALL ONLY. Astem DOES NOT INCLUDE THICKNESS OF STONE VENEER ON WALL FRONT FACE.

NORTH CAROLINA PROFESSIONAL SEAL 22072 ENGINEER JOHN ARTHUR DAVIS
2-15-12

REVISIONS

NO.	DATE	DESCRIPTION	BY

WETHERILL ENGINEERING
559 Jones Franklin Rd. Suite 164
Raleigh, N.C. 27606
Bus: 919 851 8077
Fax: 919 851 8107
License No.: F-0377

TRANSPORTATION PLANNING/DESIGN - BRIDGE/STRUCTURE DESIGN
CIVIL/SITE DESIGN - GIS/GPS - CONSTRUCTION OBSERVATION

Wall No. 3 Details
Sta. 11+06.64 -L- to Sta. 11+70.61 -L-

Wait Ave
Town of Wake Forest
North Carolina

DATE: 12 - 2011
SCALE: NTS
DRAWN BY: GFW
CHECKED BY: JAD
SHEET: W3-2 OF 3
PROJ. NO.:

2/15/2012 3:15:12 PM
P:\2011\11360.06 Wait Ave Wake Forest\DGN\Wall DETAILS 3.dgn

CANTILEVERED CONCRETE RETAINING WALL NO. 3

STATION TO STATION	CONCRETE DIMENSIONS & VOLUMES: OFFSET FROM -L-	WALL SECTION LENGTH	MAX. WALL HEIGHT ABOVE TOP OF FOOTING BASE (H)	✱ STEM THICKNESS (Astem)	TOE (B)	HEEL (C)	WIDTH OF BASE (W)	HEIGHT OF FOOTING (Abase)	KEY (T MIN. x K)	CONCRETE QUANTITY	ELEVATIONS: TOP OF WALL EL.	BOTTOM OF WALL /TOP OF FOOTING EL.	BOTTOM OF FOOTING EL.	STEM REINFORCEMENT: "O" BARS SIZE @ IN.	"Lw" BARS #BARS - SIZE	FOOTING REINFORCEMENT: "P" BARS SIZE @ IN.	"Lb" BARS #BARS -SIZE	"Kb" BARS SIZE @ IN.
-L- 11+06.64 TO 11+06.64	29'-5¾" LT.	4'-0"	3.06'	8"	1'-6"	1'-0"	3'-2"	12"	—	0.8 CY	359.4 TO 359.4	356.3	355.3	#5 @ 8"	5 - #4	#5 @ 8"	8 - #4	#5 @ 1'-4"
11+06.64 TO 11+22.73	25'-6⅛" LT.	16'-1"	3.06'	8"	1'-6"	1'-0"	3'-2"	12"	8"x6"	3.3 CY	359.4 TO 359.4	356.3	355.3	#5 @ 8"	5 - #4	#5 @ 8"	8 - #4	#5 @ 1'-4"
11+22.73 TO 11+38.73	25'-6¾" LT.	16'-0"	3.59'	8"	1'-6"	1'-0"	3'-2"	12"	8"x6"	3.5 CY	359.9 TO 359.9	356.3	355.3	#5 @ 8"	5 - #4	#5 @ 8"	8 - #4	#5 @ 1'-4"
11+38.73 TO 11+54.73	25'-7⅜" LT.	16'-0"	4.13'	8"	1'-6"	1'-0"	3'-2"	12"	8"x6"	3.5 CY	360.4 TO 360.4	356.3	355.3	#5 @ 8"	5 - #4	#5 @ 8"	8 - #4	#5 @ 1'-4"
11+54.73 TO 11+70.73	25'-7⅞" LT.	16'-0"	3.67	8"	1'-6"	1'-0"	3'-2"	12"	8"x6"	3.5 CY	360.9 TO 360.9	356.3 TO 357.3	355.3 TO 357.3	#5 @ 8"	5 - #4	#5 @ 8"	8 - #4	#5 @ 1'-4"
11+70.73 TO 11+70.72	25'-8½" LT.	2'-4"	3.67	8"	1'-6"	1'-0"	3'-2"	12"	—	0.5 CY	360.9 TO 360.9	357.3	356.3	#5 @ 8"	5 - #4	#5 @ 8"	8 - #4	#5 @ 1'-4"
11+70.72 TO 11+70.61	25'-8" LT. TO 31'-11½" LT.	3'-11"	4.165'	8"	1'-6"	1'-0"	3'-2"	12"	—	0.9 CY	361.5 TO 361.5	357.3	356.3	#5 @ 8"	5 - #4	#5 @ 8"	8 - #4	#5 @ 1'-4"

✱ STEM THICKNESS (Astem) IS THICKNESS OF CONCRETE WALL ONLY. Astem DOES NOT INCLUDE THICKNESS OF STONE VENEER ON WALL FRONT FACE.

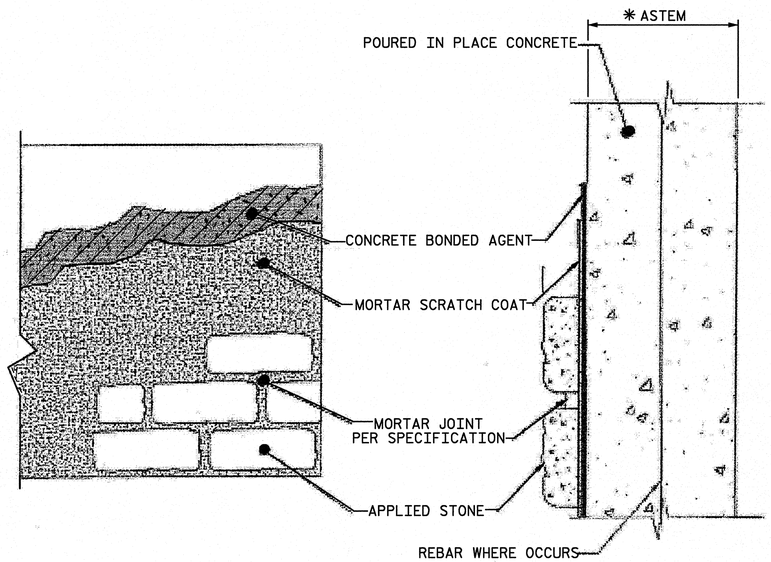

STONE VENEER INSTALLATION OVER POURED CONCRETE SURFACES

SPECIFICATIONS:

- CONCRETE BONDING AGENT: SURFACE APPLIED BONDING AGENTS THAT MEET ASTM C 1059 OR ASTM C 932. INTEGRALLY MIXED (IN MORTAR SCRATCH COAT) CAN BE USED SUCH THAT MORTAR ACHIEVES MINIMUM SHEAR BOND STRENGTH OF 50 PSI WHEN TESTED IN ACCORDANCE WITH ASTM C482. AS AN ALTERNATIVE TO CONCRETE BONDING AGENT, CORROSION RESISTANT MINIMUM 2.5 LBS. PER SQUARE YARD EXPANDED METAL LATH THAT COMPLIES WITH ASTM C 847 AND APPLIED WITH APPROPRIATE CONCRETE FASTNERS MAY BE USED. USE CONCRETE FASTENING PINS WITH WASHERS APPLIED WITH A POWDER ACTUATED FASTENING TOOL. PINS SHALL HAVE A MINIMUM SHANK LENGTH OF ¾IN. WITH A 0.145 IN. HEAD DIAMETER AND UTILIZE A 16 GAGE WASHER.
- MORTAR SCRATCH COAT AND MORTAR JOINTS (IF APPLICABLE), PROPORTIONS BY VOLUME:
  - PORTLAND TYPE I/II CEMENT ASTM C-150 (1 PART), MASOMRY TYPE-N CEMENT ASTM C-270 1 PART), MASONRY SAND ASTM C-144 (3 PARTS), WATER ADDED TO ACHIEVE FIRM, MOIST CONSISTENCY, PIGMENT (POWDER OR LIQUID) ASTM C979 OPTIONAL, OR
  - MASONRY TYPE-S CEMENT ASTM C270 (1 PART), MASONRY SAND ASTM C-144 (3 PARTS), WATER ADDED TO ACHIEVE FIRM, MOIST CONSISTENCY, PIGMENT (POWDER OR LIQUID) ASTM C979 OPTIONAL

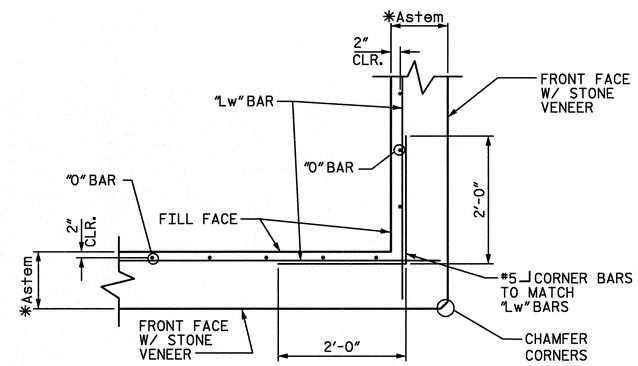

WALL CORNER DETAIL PLAN @ -L- STA. 11+06.75 & 11+70.73

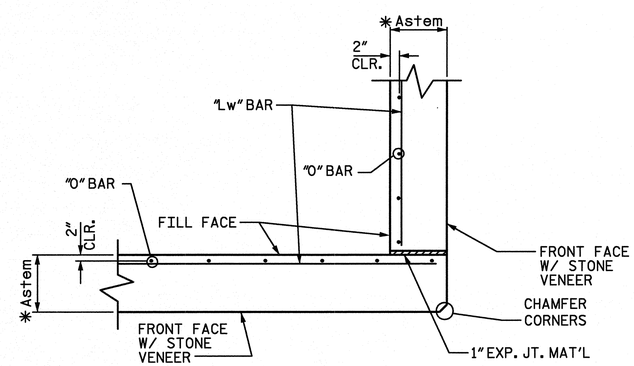

OPTIONAL-WALL CORNER DETAIL PLAN @ -L- STA. 11+06.75 & 11+70.73

REVISIONS

NO.	DATE	DESCRIPTION	BY

559 Jones Franklin Rd. Suite 164
Raleigh, N.C. 27606
Bus: 919 851 8077
Fax: 919 851 8107
License No.: F-0377
WETHERILL ENGINEERING

TRANSPORTATION PLANNING/DESIGN - BRIDGE/STRUCTURE DESIGN
CIVIL/SITE DESIGN - GIS/GPS - CONSTRUCTION OBSERVATION

Wall No. 3 Details
Sta. 11+06.64 -L- to Sta. 11+70.61-L-

Wait Ave
Town of Wake Forest
North Carolina

DATE: 12 - 2011
SCALE: NTS
DRAWN BY: GFW
CHECKED BY: JAD
SHEET: W3-3 OF 3
PROJ. NO.:

2/15/2012
3:15:24 PM
P:\2011\11360.06 Wait Ave Wake Forest\DGN\Wall DETAILS 3.dgn

CONTRACTOR IS RESPONSIBLE FOR LOCATING UTILITIES PRIOR TO CONSTRUCTION. IF THERE ARE ANY DEVIANCE FROM THE PLANS THE ENGINEER SHALL BE CONTACTED.

THE CONTRACTOR SHALL MAKE FIELD ADJUSTMENTS AS NECESSARY FOR HEIGHT AND LAYOUT OF WALL AS TO BEST FIT EXISTING FIELD CONDITIONS.

ALL CONSTRUCTION SHALL BE IN ACCORDANCE WITH TOWN OF WAKE FOREST STANDARDS AND SPECIFICATIONS.

SURVEY BY WK DICKSON & ASSOCIATES. ENGINEERS NOT RESPONSIBLE FOR THE ACCURACY OF THE SURVEY. THE CONTRACTOR SHALL FIELD VARIFY THE LOCATION OF ANY EXISTING CONSTRUCTION CONFLICTS AND NOTIFY ENGINEER OF ANY DEVIATION FROM THIS SURVEY.

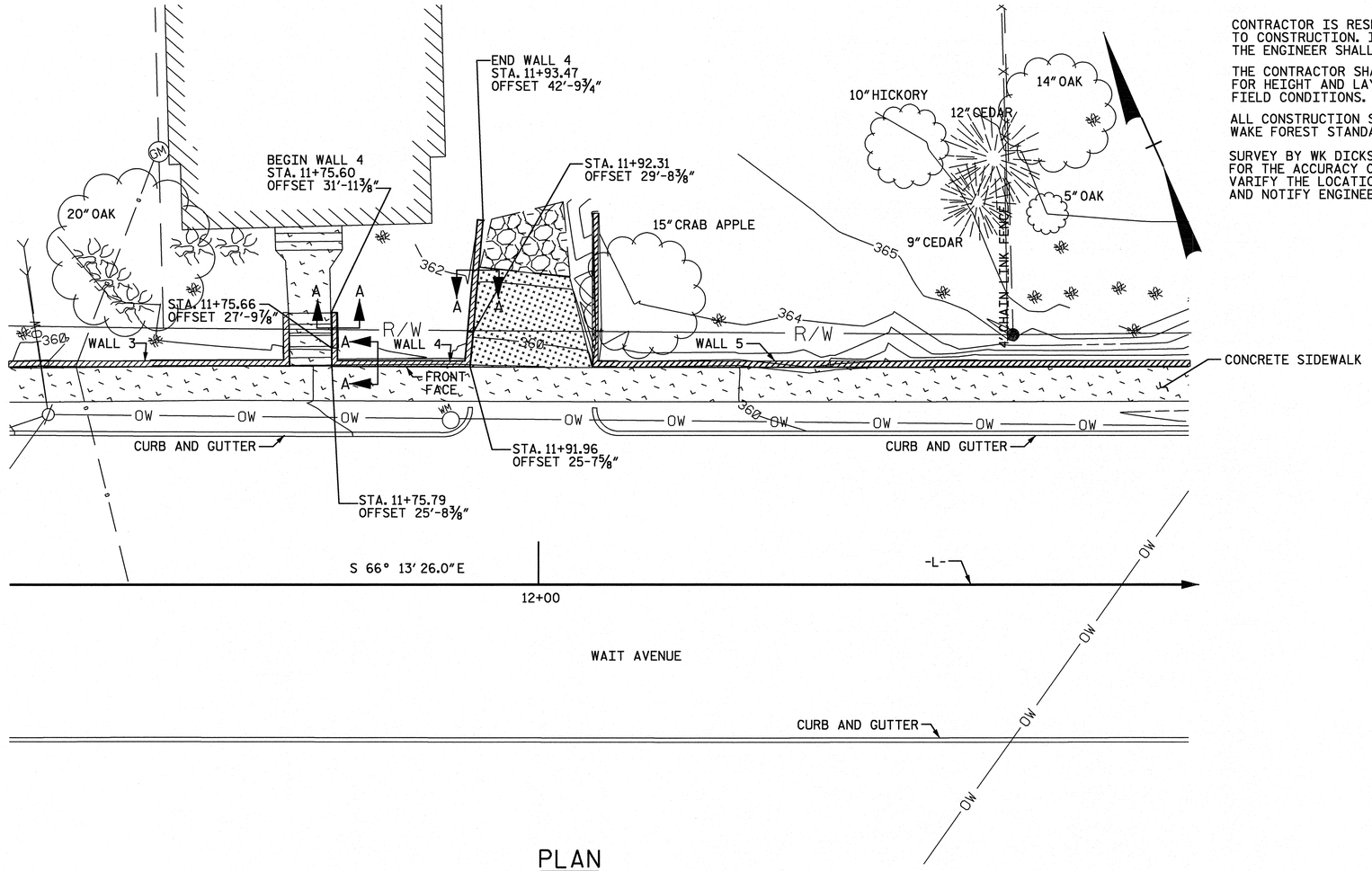

PLAN

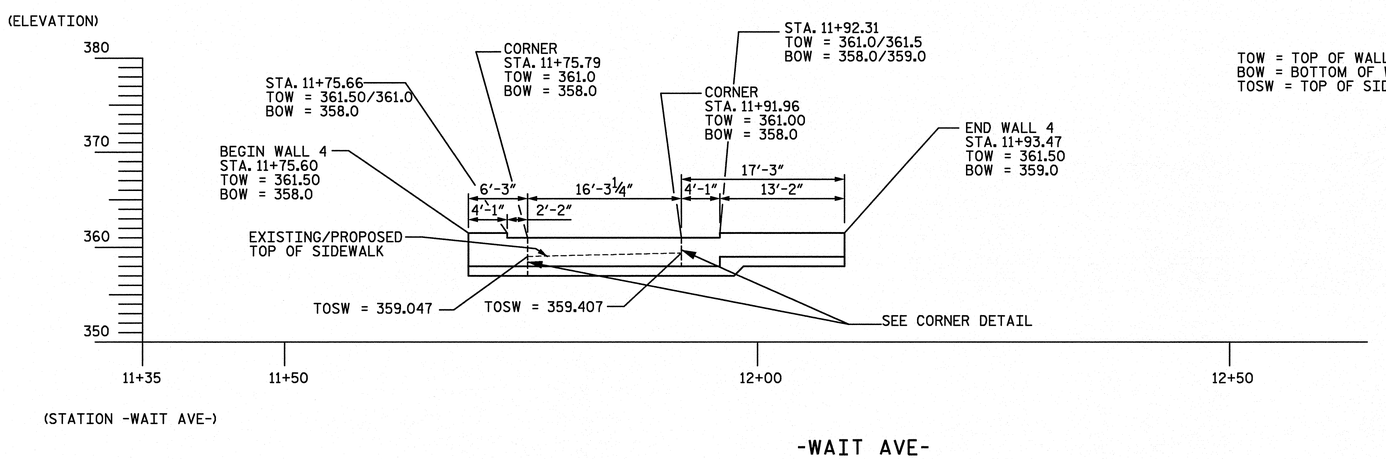

TOW = TOP OF WALL ELEVATION
BOW = BOTTOM OF WALL ELEVATION = TOP OF FOOTING
TOSW = TOP OF SIDEWALK ELEVATION

CANTILEVERED CONCRETE RETAINING WALL NO. 4 ELEVATION - FRONT FACE

NORTH CAROLINA PROFESSIONAL SEAL 22072 ENGINEER JOHN ARTHUR DUNCAN 2-15-12

REVISIONS

NO.	DATE	DESCRIPTION	BY

WETHERILL ENGINEERING
559 Jones Franklin Rd. Suite 164
Raleigh, N.C. 27606
Bus: 919 851 8077
Fax: 919 851 8107
License No.: F-0377

TRANSPORTATION PLANNING/DESIGN - BRIDGE/STRUCTURE DESIGN
CIVIL/SITE DESIGN - GIS/GPS - CONSTRUCTION OBSERVATION

WALL NO. 4 LAYOUT
Sta. 11+75.60 -L- to Sta. 11+93.47 -L-

Wait Ave
Town of Wake Forest
North Carolina

DATE: 12 - 2011
SCALE: NTS
DRAWN BY: GFW
CHECKED BY: JAD
SHEET: W4 1 OF 3
PROJ. NO.:

2/15/2012
9:15:53 AM
P:\2011\11360.06 Wait Ave Wake Forest\DGN\Wall 4.dgn

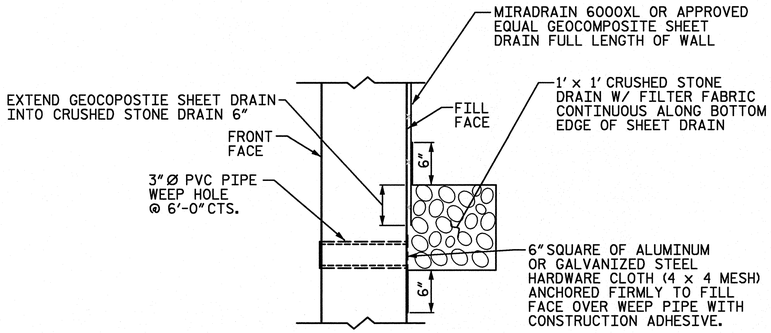

WALL DRAIN DETAIL

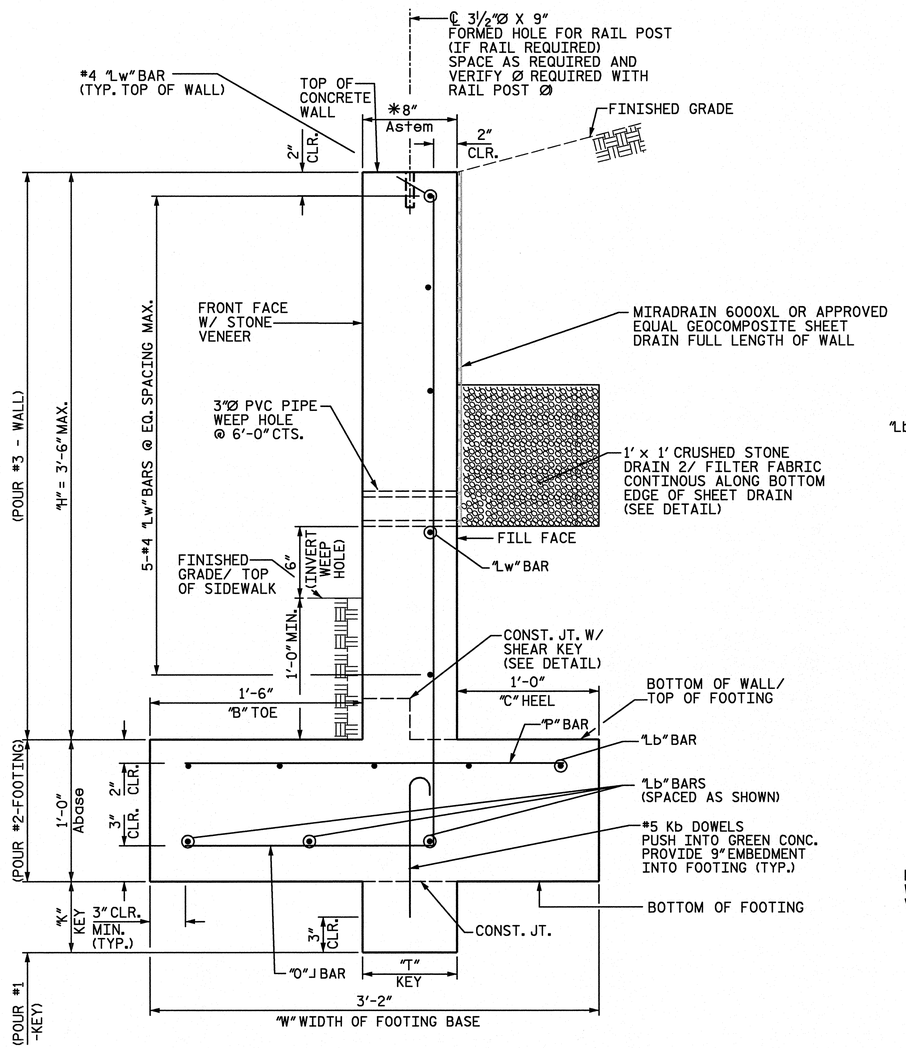

SECTION A-A

CANTILEVERED CONCRETE RETAINING WALL
STATION 11+75.60 -L- TO STATION 11+93.47 -L-

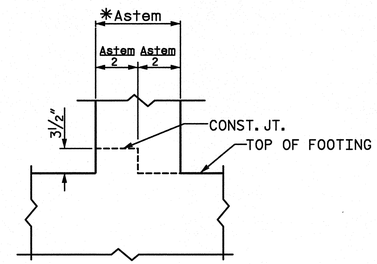

SHEAR KEY DETAIL

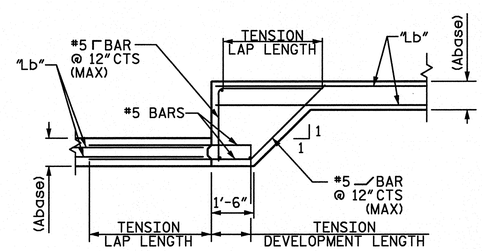

FOOTING STEP DETAIL

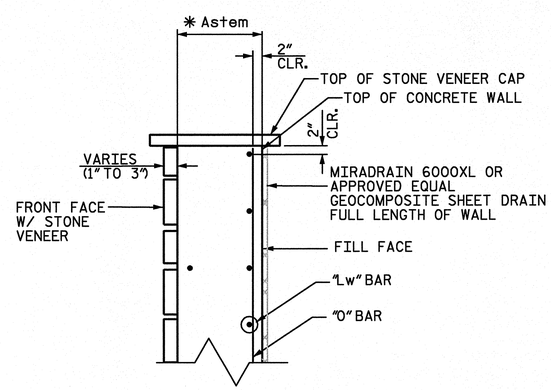

STONE VENEER FRONT FACE

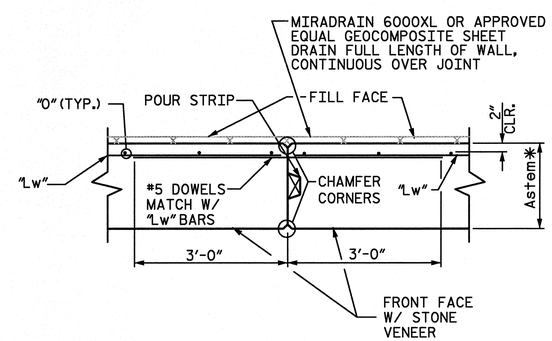

VERTICAL CONSTRUCTION JOINT WALL PLAN VIEW

GENERAL ENGINEERING NOTES

1. ALL APPLIED LOADS AND LOAD COMBINATIONS ARE IN ACCORDANCE WITH THE NORTH CAROLINA BUILDING CODE 2006 EDITION AND 17TH EDITION OF AASHTO STANDARD SPECIFICATIONS FOR HIGHWAY BRIDGES.
2. CONTRACTOR SHALL HAVE A GEOTECHNICAL ENGINEER FIELD VERIFY THE BEARING CAPACITY OF THE SOIL FOR THE WALL FOOTINGS. SOILS SHALL BE SUITABLE FOR PROVIDING THE REQUIRED BEARING CAPACITY OF 2,000 PSF WITH A MINIMUM FACTOR OF SAFETY OF 3.
3. DESIGN PARAMETERS:
   SOIL WEIGHT = 120 PCF
   EQUIVALENT FLUID PRESSURE = 45 PCF
   Ka = 0.375
   COEFFICIENT OF FRICTION = 0.32
   ALLOWABLE BEARING CAPACITY = 2,000 PSF
4. SITE PREPARATION AND SOIL CONDITIONING DURING CONSTRUCTION ARE THE RESPONSIBILITY OF THE CONTRACTOR.
5. THE MINIMUM 28 DAY COMPRESSION STRENGTH OF CONCRETE SHALL BE 3,000 PSI.
6. ALL REINFORCING STEEL SHALL BE ASTM A615, GRADE 60 DEFORMED BARS. FY=60 KSI. ALL REINFORCING SHALL BE PLACED IN ACCORDANCE WITH LATEST EDITION OF ACI318 AND ACI315. MINIMUM SPLICE LENGTHS SHALL BE 40 BAR DIAMETERS.
7. ALL CONTRACTION JOINTS (CONTROL JOINTS) SHALL BE NO GREATER THAN 25' APART. JOINT DEPTH SHALL BE 1" DEEP BY ¼" WIDE ON BOTH FACES.
8. CONTRACTOR SHALL CONSTRUCT THE WALL AS SHOWN IN THESE PLANS. ANY AND ALL MODIFICATIONS SHALL BE APPROVED BY THE ENGINEER IN WRITING PRIOR TO CONSTRUCTION.
9. CONTRACTOR SHALL BE RESPONSIBLE FOR COMPILING WITH ALL LOCAL, STATE AND FEDERAL REGULATIONS.
10. CONTRACTOR SHALL THOUROUGHLY REVIEW PLANS AND SPECIFICATIONS PRIOR TO CONSTRUCTION. REQUEST FOR ADDITIONAL INFORMATION AND CLARIFICATIONS SHALL BE MADE TO THE ENGINEER IN WRITING.
11. PVC PIPE SHALL BE SCHEDULE 40 AND SHALL CONFORM TO THE REQUIREMENTS OF THE ASTM D-1785.
12. GEOCOMPOSITE SHEET DRAIN SHALL BE MIRADRAIN 6000XL OR APPROVED EQUAL. GEOCOMPOSITE SHEET DRAIN SHALL BE INSTALLED IN ACCORDANCE WITH MANUFACTURER'S REQUIREMENTS.
13. UNLESS OTHERWISE NOTED ON THE PLANS, ALL EXPOSED CORNERS ON STRUCTURES SHALL BE CHAMFERED ¾".
14. EXISTING SIDEWALK IS TO BE REMOVED. PROPOSED SIDEWALK SHALL BE PLACED AT THE ELEVATION AND LOCATION OF THE PREVIOUS SIDEWALK.
15. A 42" TALL GUARDRAIL SHALL BE REQUIRED AT ALL LOCATIONS WHERE THE RETAINING WALL HEIGHT IS 30" OR GREATER ABOVE FINISHED GRADE.

* STEM THICKNESS (Astem) IS THICKNESS OF CONCRETE WALL ONLY. Astem DOES NOT INCLUDE THICKNESS OF STONE VENEER ON WALL FRONT FACE.

NORTH CAROLINA PROFESSIONAL SEAL 22072 ENGINEER JOHN ARTHUR HILLWORTH III
2-15-12

REVISIONS

NO.	DATE	DESCRIPTION	BY

WETHERILL ENGINEERING
559 Jones Franklin Rd. Suite 164
Raleigh, N.C. 27606
Bus: 919 851 8077
Fax: 919 851 8107
License No.: F-0377

TRANSPORTATION PLANNING/DESIGN - BRIDGE/STRUCTURE DESIGN
CIVIL/SITE DESIGN - GIS/GPS - CONSTRUCTION OBSERVATION

Wall No. 4 Details
Sta. 11+75.60 -L- to Sta. 11+93.47 -L-

Wait Ave
Town of Wake Forest
North Carolina

DATE: 12 - 2011
SCALE: NTS
DRAWN BY: GFW
CHECKED BY: JAD
SHEET: W4 2 OF 3
PROJ. NO.:

2/15/2012
9:16:35 AM
P:\2011\11360.06 Wait Ave Wake Forest\DGN\Wall DETAILS 4.dgn

CANTILEVERED CONCRETE RETAINING WALL NO. 4

STATION TO STATION	CONCRETE DIMENSIONS & VOLUMES: OFFSET FROM -L-	WALL SECTION LENGTH	MAX. WALL HEIGHT ABOVE TOP OF FOOTING BASE (H)	* STEM THICKNESS (Astem)	TOE (B)	HEEL (C)	WIDTH OF BASE (W)	HEIGHT OF FOOTING (Abase)	KEY (T MIN. x K)	CONCRETE QUANTITY	ELEVATIONS: TOP OF WALL EL.	BOTTOM OF WALL /TOP OF FOOTING EL.	BOTTOM OF FOOTING EL.	STEM REINFORCEMENT: "O" BARS SIZE @ IN.	"Lw" BARS *BARS - SIZE	FOOTING REINFORCEMENT: "P" BARS SIZE @ IN.	"Lb" BARS *BARS -SIZE	"Kb" BARS SIZE @ IN.
-L- 11+75.60 TO 11+75.60	31'-11⅜" LT.	4'-1"	3.50'	8"	1'-6"	1'-0"	3'-2"	12"	——	0.8 CY	361.5 TO 361.5	358.0	357.0	#5 @ 8"	5 - #4	#5 @ 8"	8 - #4	#5 @ 1'-4"
11+75.60 TO 11+75.79	27'-9⅞" LT.	2'-2"	3.00'	8"	1'-6"	1'-0"	3'-2"	12"	——	0.4 CY	361.0 TO 361.0	358.0	357.0	#5 @ 8"	5 - #4	#5 @ 8"	8 - #4	#5 @ 1'-4"
11+75.79 TO 11+96.96	25'-8⅜" LT.	16'-3¼"	3.00'	8"	1'-6"	1'-0"	3'-2"	12"	8"x6"	3.3 CY	361.0 TO 361.0	358.0	357.0	#5 @ 8"	5 - #4	#5 @ 8"	8 - #4	#5 @ 1'-4"
11+96.96 TO 11+92.31	25'-7⅝" LT.	4'-1"	3.00'	8"	1'-6"	1'-0"	3'-2"	12"	8"x6"	0.8 CY	361.0 TO 361.0	358.0	357.0	#5 @ 8"	5 - #4	#5 @ 8"	8 - #4	#5 @ 1'-4"
11+92.31 TO 11+93.47	29'-8⅜" LT. TO 42'-9¾"	13'-2"	2.50'	8"	1'-6"	1'-0"	3'-2"	12"	8"x6"	2.5 CY	361.50 TO 361.50	359.0	358.0	#5 @ 8"	5 - #4	#5 @ 8"	8 - #4	#5 @ 1'-4"

* STEM THICKNESS (Astem) IS THICKNESS OF CONCRETE WALL ONLY. Astem DOES NOT INCLUDE THICKNESS OF STONE VENEER ON WALL FRONT FACE.

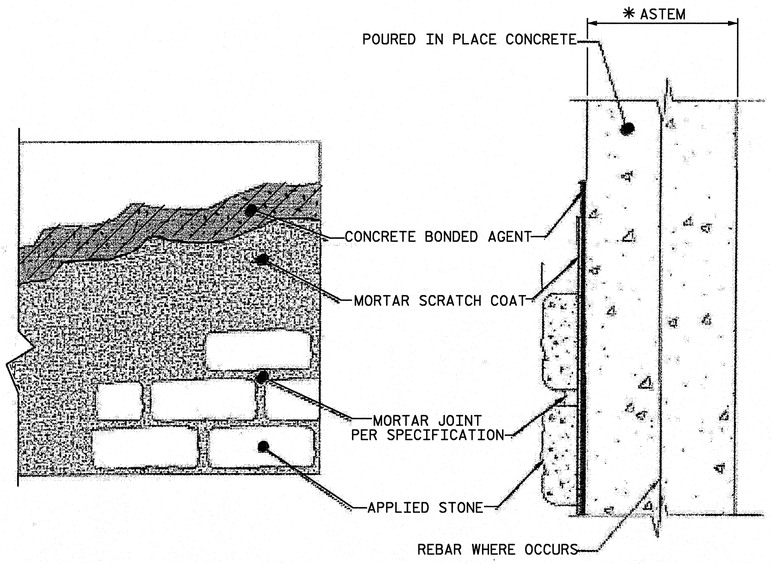

STONE VENEER INSTALLATION OVER POURED CONCRETE SURFACES

SPECIFICATIONS:

- CONCRETE BONDING AGENT: SURFACE APPLIED BONDING AGENTS THAT MEET ASTM C 1059 OR ASTM C 932. INTEGRALLY MIXED (IN MORTAR SCRATCH COAT) CAN BE USED SUCH THAT MORTAR ACHIEVES MINIMUM SHEAR BOND STRENGTH OF 50 PSI WHEN TESTED IN ACCORDANCE WITH ASTM C482. AS AN ALTERNATIVE TO CONCRETE BONDING AGENT, CORROSION RESISTANT MINIMUM 2.5 LBS. PER SQUARE YARD EXPANDED METAL LATH THAT COMPLIES WITH ASTM C 847 AND APPLIED WITH APPROPRIATE CONCRETE FASTNERS MAY BE USED. USE CONCRETE FASTENING PINS WITH WASHERS APPLIED WITH A POWDER ACTUATED FASTENING TOOL. PINS SHALL HAVE A MINIMUM SHANK LENGTH OF ¾IN. WITH A 0.145 IN. HEAD DIAMETER AND UTILIZE A 16 GAGE WASHER.
- MORTAR SCRATCH COAT AND MORTAR JOINTS (IF APPLICABLE), PROPORTIONS BY VOLUME:
  - PORTLAND TYPE I/II CEMENT ASTM C-150 (1 PART), MASOMRY TYPE-N CEMENT ASTM C-270 1 PART), MASONRY SAND ASTM C-144 (3 PARTS), WATER ADDED TO ACHIEVE FIRM, MOIST CONSISTENCY, PIGMENT (POWDER OR LIQUID) ASTM C979 OPTIONAL, OR
  - MASONRY TYPE-S CEMENT ASTM C270 (1 PART), MASONRY SAND ASTM C-144 (3 PARTS), WATER ADDED TO ACHIEVE FIRM, MOIST CONSISTENCY, PIGMENT (POWDER OR LIQUID) ASTM C979 OPTIONAL

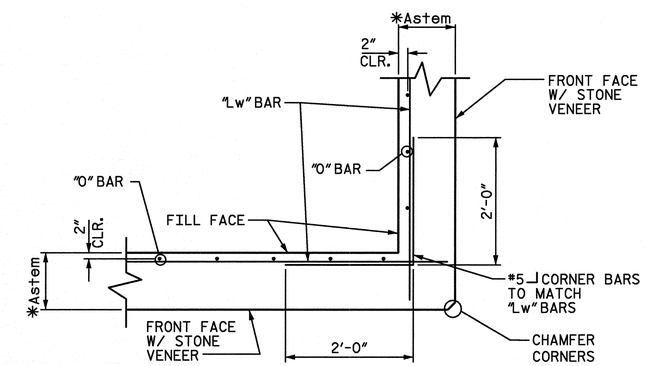

WALL CORNER DETAIL PLAN
@ -L- STA. 11+75.79 & 11+91.96

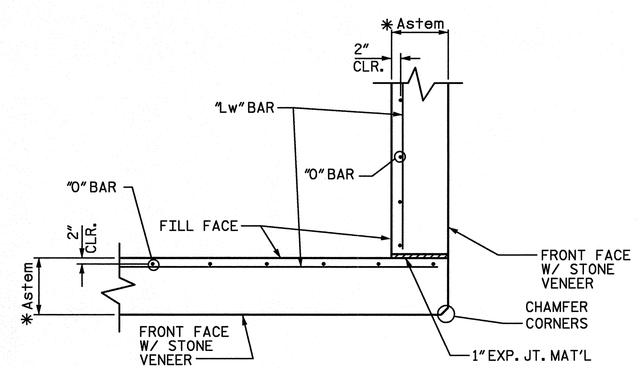

OPTIONAL-WALL CORNER DETAIL PLAN
@ -L- STA. 11+75.79 & 11+91.96

REVISIONS

NO.	DATE	DESCRIPTION	BY

559 Jones Franklin Rd. Suite 164
Raleigh, N.C. 27606
Bus: 919 851 8077
Fax: 919 851 8107
License No.: F-0377
ETHERILL ENGINEERING
TRANSPORTATION PLANNING/DESIGN - BRIDGE/STRUCTURE DESIGN
CIVIL/SITE DESIGN - GIS/GPS - CONSTRUCTION OBSERVATION

Wall No. 4 Details
Sta. 11+75.60 -L- to Sta. 11+93.47-L-

Wait Ave
Town of Wake Forest
North Carolina

DATE: 12 - 2011
SCALE: NTS
DRAWN BY: GFW
CHECKED BY: JAD
SHEET: W4 3 OF 3
PROJ. NO.:

2/15/2012
3:18:47 PM
P:\2011\11360.06 Wait Ave Wake Forest\DGN\Wall DETAILS 4.dgn

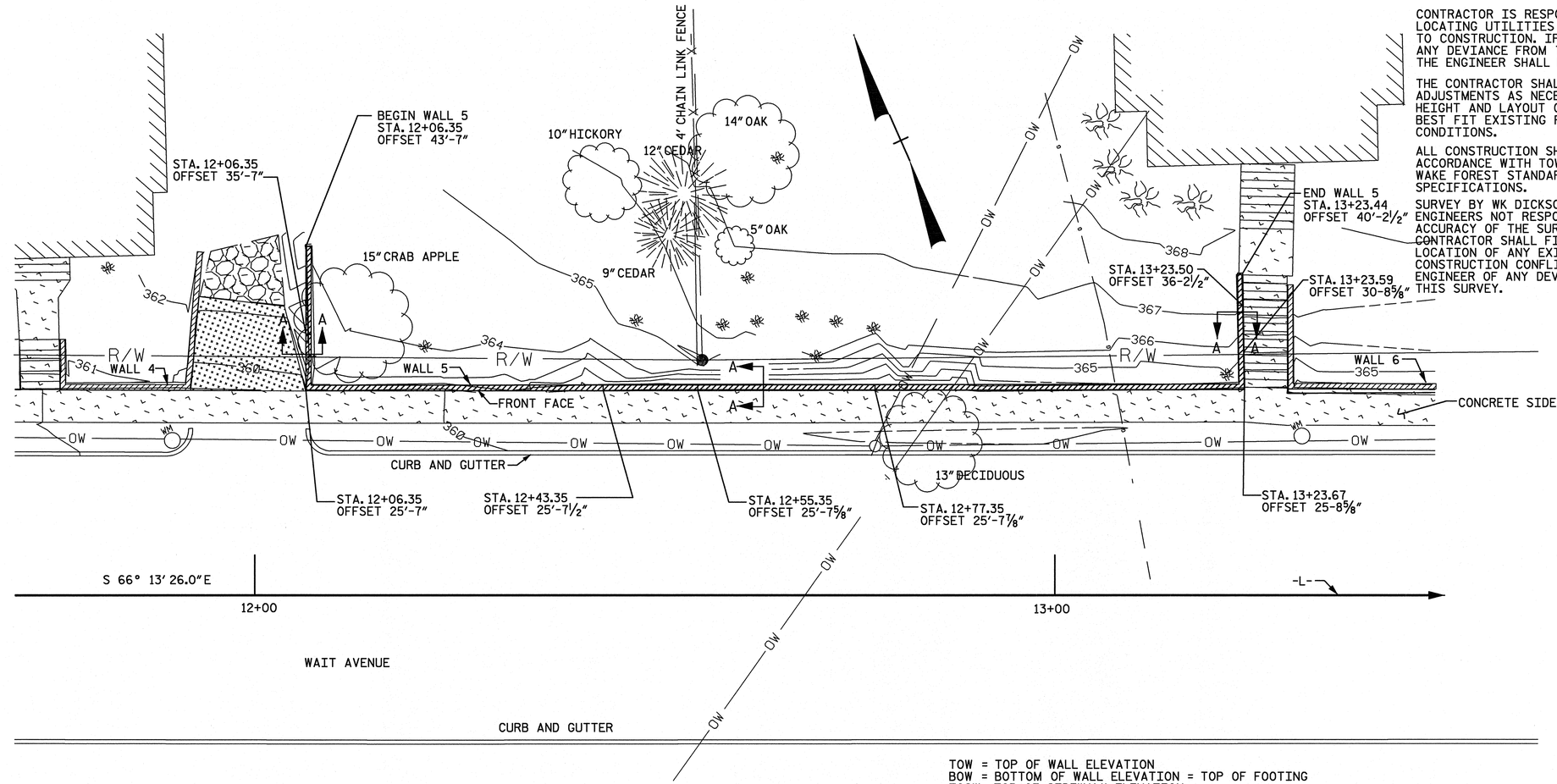

CONTRACTOR IS RESPONSIBLE FOR LOCATING UTILITIES PRIOR TO CONSTRUCTION. IF THERE ARE ANY DEVIANCE FROM THE PLANS THE ENGINEER SHALL BE CONTACTED.

THE CONTRACTOR SHALL MAKE FIELD ADJUSTMENTS AS NECESSARY FOR HEIGHT AND LAYOUT OF WALL AS TO BEST FIT EXISTING FIELD CONDITIONS.

ALL CONSTRUCTION SHALL BE IN ACCORDANCE WITH TOWN OF WAKE FOREST STANDARDS AND SPECIFICATIONS.

SURVEY BY WK DICKSON & ASSOCIATES. ENGINEERS NOT RESPONSIBLE FOR THE ACCURACY OF THE SURVEY. THE CONTRACTOR SHALL FIELD VARIFY THE LOCATION OF ANY EXISTING CONSTRUCTION CONFLICTS AND NOTIFY ENGINEER OF ANY DEVIATION FROM THIS SURVEY.

TOW = TOP OF WALL ELEVATION
BOW = BOTTOM OF WALL ELEVATION = TOP OF FOOTING
TOSW= TOP OF SIDEWALK ELEVATION

PLAN

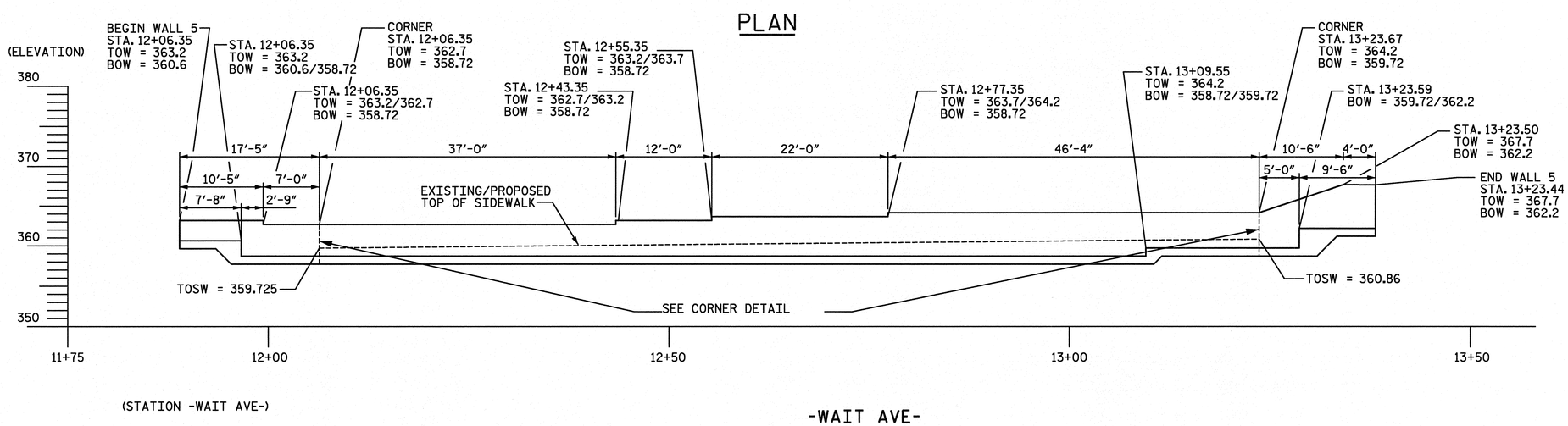

CANTILEVERED CONCRETE RETAINING WALL NO. 5 ELEVATION - FRONT FACE

NORTH CAROLINA PROFESSIONAL SEAL 22072 JOHN BARKER HAMPTON
2-15-12

REVISIONS

NO.	DATE	DESCRIPTION	BY

559 Jones Franklin Rd. Suite 164
Raleigh, N.C. 27606
Bus: 919 851 8077
Fax: 919 851 8107
License No.: F-0377

WETHERILL ENGINEERING

TRANSPORTATION PLANNING/DESIGN - BRIDGE/STRUCTURE DESIGN
CIVIL/SITE DESIGN - GIS/GPS - CONSTRUCTION OBSERVATION

WALL NO. 5 LAYOUT
Sta. 12+06.35 -L- to Sta. 13+23.44 -L-

Wait Ave
Town of Wake Forest
North Carolina

DATE: 12 - 2011
SCALE: NTS
DRAWN BY: GFW
CHECKED BY: JAD
SHEET: W5 1 OF 3
PROJ. NO.:

2/15/2012
3:26:02 PM
P:\2011\11360.06 Wait Ave Wake Forest\DGN\Wall 5.dgn

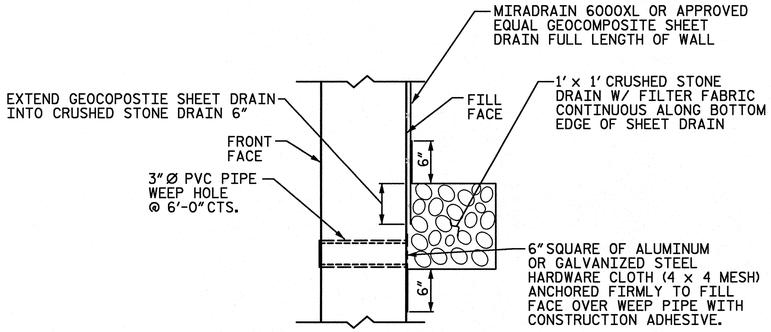

WALL DRAIN DETAIL

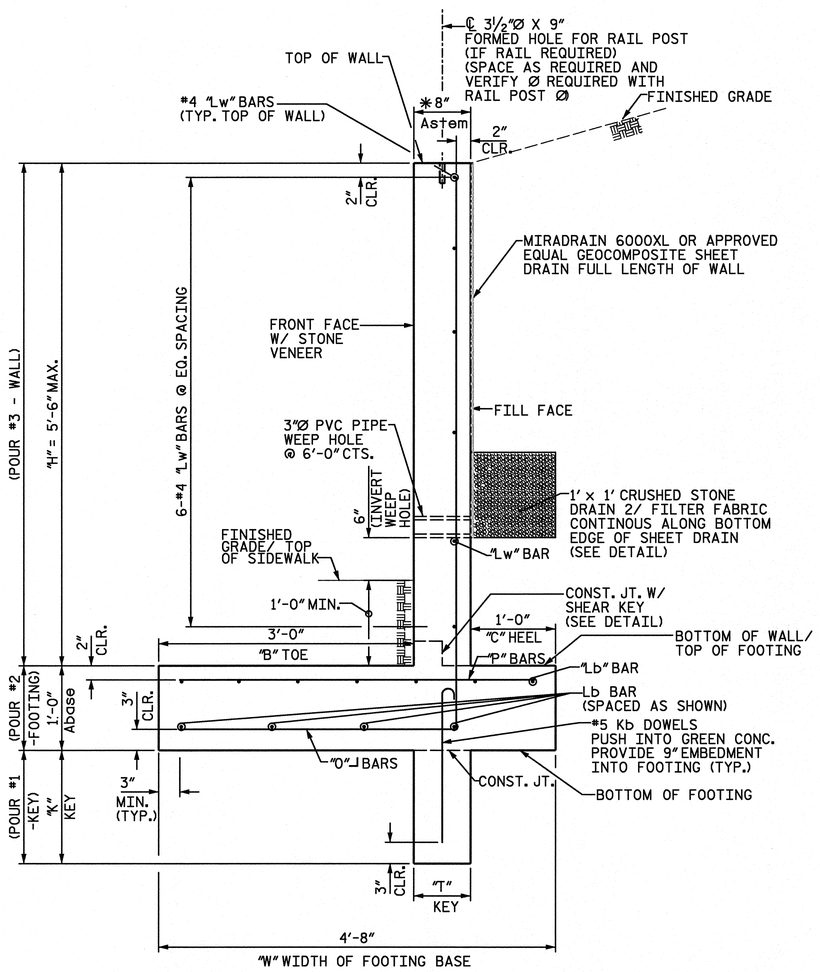

SECTION A-A

CANTILEVERED CONCRETE RETAINING WALL
STATION 12+06.35 -L- TO STATION 13+23.44 -L-

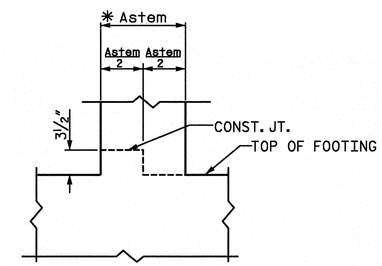

SHEAR KEY DETAIL

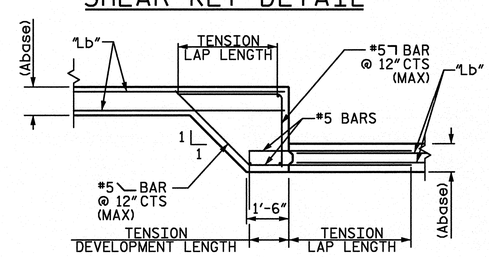

FOOTING STEP DETAIL

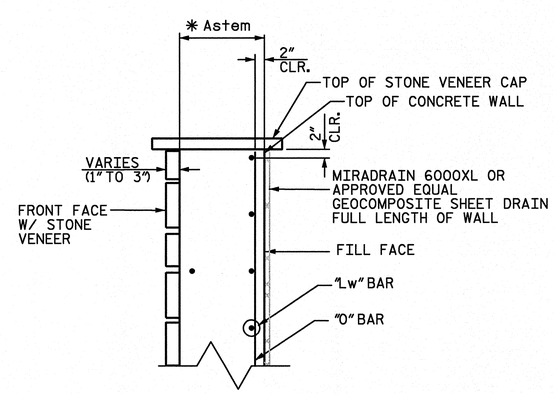

STONE VENEER FRONT FACE

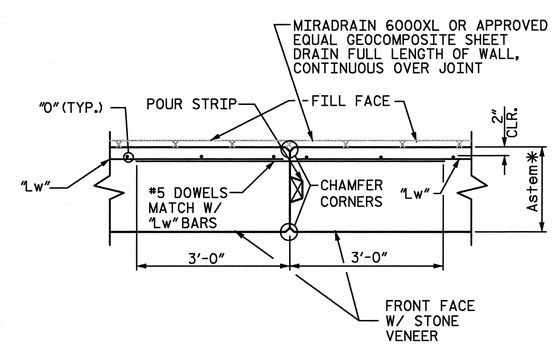

VERTICAL CONSTRUCTION JOINT WALL PLAN VIEW

GENERAL ENGINEERING NOTES

1. ALL APPLIED LOADS AND LOAD COMBINATIONS ARE IN ACCORDANCE WITH THE NORTH CAROLINA BUILDING CODE 2006 EDITION AND 17TH EDITION OF AASHTO STANDARD SPECIFICATIONS FOR HIGHWAY BRIDGES.
2. CONTRACTOR SHALL HAVE A GEOTECHNICAL ENGINEER FIELD VERIFY THE BEARING CAPACITY OF THE SOIL FOR THE WALL FOOTINGS. SOILS SHALL BE SUITABLE FOR PROVIDING THE REQUIRED BEARING CAPACITY OF 2,000 PSF WITH A MINIMUM FACTOR OF SAFETY OF 3.
3. DESIGN PARAMETERS:
   SOIL WEIGHT = 120 PCF
   EQUIVALENT FLUID PRESSURE = 65 PCF
   Ka = 0.542
   COEFFICIENT OF FRICTION = 0.32
   ALLOWABLE BEARING CAPACITY = 2,000 PSF
4. SITE PREPARATION AND SOIL CONDITIONING DURING CONSTRUCTION ARE THE RESPONSIBILITY OF THE CONTRACTOR.
5. THE MINIMUM 28 DAY COMPRESSION STRENGTH OF CONCRETE SHALL BE 3,000 PSI.
6. ALL REINFORCING STEEL SHALL BE ASTM A615, GRADE 60 DEFORMED BARS. FY=60 KSI. ALL REINFORCING SHALL BE PLACED IN ACCORDANCE WITH LATEST EDITION OF ACI318 AND ACI315. MINIMUM SPLICE LENGTHS SHALL BE 40 BAR DIAMETERS.
7. ALL CONTRACTION JOINTS (CONTROL JOINTS) SHALL BE NO GREATER THAN 25' APART. JOINT DEPTH SHALL BE 1" DEEP BY ¼" WIDE ON BOTH FACES.
8. CONTRACTOR SHALL CONSTRUCT THE WALL AS SHOWN IN THESE PLANS. ANY AND ALL MODIFICATIONS SHALL BE APPROVED BY THE ENGINEER IN WRITING PRIOR TO CONSTRUCTION.
9. CONTRACTOR SHALL BE RESPONSIBLE FOR COMPILING WITH ALL LOCAL, STATE AND FEDERAL REGULATIONS.
10. CONTRACTOR SHALL THOUROUGHLY REVIEW PLANS AND SPECIFICATIONS PRIOR TO CONSTRUCTION. REQUEST FOR ADDITIONAL INFORMATION AND CLARIFICATIONS SHALL BE MADE TO THE ENGINEER IN WRITING.
11. PVC PIPE SHALL BE SCHEDULE 40 AND SHALL CONFORM TO THE REQUIREMENTS OF THE ASTM D-1785.
12. GEOCOMPOSITE SHEET DRAIN SHALL BE MIRADRAIN 6000XL OR APPROVED EQUAL. GEOCOMPOSITE SHEET DRAIN SHALL BE INSTALLED IN ACCORDANCE WITH MANUFACTURER'S REQUIREMENTS.
13. UNLESS OTHERWISE NOTED ON THE PLANS, ALL EXPOSED CORNERS ON STRUCTURES SHALL BE CHAMFERED ¾".
14. EXISTING SIDEWALK IS TO BE REMOVED. PROPOSED SIDEWALK SHALL BE PLACED AT THE ELEVATION AND LOCATION OF THE PREVIOUS SIDEWALK.
15. A 42" TALL GUARDRAIL SHALL BE REQUIRED AT ALL LOCATIONS WHERE THE RETAINING WALL HEIGHT IS 30" OR GREATER ABOVE FINISHED GRADE.

* STEM THICKNESS (Astem) IS THICKNESS OF CONCRETE WALL ONLY. Astem DOES NOT INCLUDE THICKNESS OF STONE VENEER ON WALL FRONT FACE.

NORTH CAROLINA PROFESSIONAL SEAL 22072 JOHN ARTHUR DAVIS
2-15-12

REVISIONS

NO.	DATE	DESCRIPTION	BY

WETHERILL ENGINEERING
559 Jones Franklin Rd. Suite 164
Raleigh, N.C. 27606
Bus: 919 851 8077
Fax: 919 851 8107
License No.: F-0377

TRANSPORTATION PLANNING/DESIGN - BRIDGE/STRUCTURE DESIGN
CIVIL/SITE DESIGN - GIS/GPS - CONSTRUCTION OBSERVATION

Wall NO. 5 Details
Sta. 12+06.35 -L- to Sta. 13+23.44 -L-

Wait Ave
Town of Wake Forest
North Carolina

DATE: 12 - 2011
SCALE: NTS
DRAWN BY: GFW
CHECKED BY: JAD
SHEET: W5 2 OF 3
PROJ. NO.:

2/15/2012
9:26:36 AM
P:\2011\11360.06 Wait Ave Wake Forest\DGN\Wall DETAILS 5.dgn

CANTILEVERED CONCRETE RETAINING WALL NO. 5

STATION TO STATION	CONCRETE DIMENSIONS & VOLUMES: OFFSET FROM -L-	WALL SECTION LENGTH	MAX. WALL HEIGHT ABOVE TOP OF FOOTING BASE (H)	* STEM THICKNESS (Astem)	TOE (B)	HEEL (C)	WIDTH OF BASE (W)	HEIGHT OF FOOTING (Abase)	KEY (T MIN. x K)	CONCRETE QUANTITY	ELEVATIONS: TOP OF WALL EL.	BOTTOM OF WALL /TOP OF FOOTING EL.	BOTTOM OF FOOTING EL.	STEM REINFORCEMENT: "O" BARS SIZE @ IN.	"Lw" BARS *BARS -SIZE	FOOTING REINFORCEMENT: "P" BARS SIZE @ IN.	"Lb" BARS *BARS -SIZE	"Kb" BARS SIZE @ IN.
-L- 12+06.35 TO 12+06.35	43'-7" LT.	10'-5"	2.60' TO 4.48'	8"	3'-0"	1'-0"	4'-8"	12"	———	2.6 CY	363.2 TO 363.2	360.6 TO 358.72	359.6 TO 357.72	#5 @ 8"	6 - #4	#5 @ 8"	11 - #4	#5 @ 1'-4"
12+06.35 TO 12+06.35	35'-7" LT.	7'-0"	3.98'	8"	3'-0"	1'-0"	4'-8"	12"	8" x 1'-4"	1.9 CY	362.7 TO 362.7	358.72	357.72	#5 @ 8"	6 - #4	#5 @ 8"	11 - #4	#5 @ 1'-4"
12+06.35 TO 12+43.35	25'-7" LT.	37'-0"	3.98'	8"	3'-0"	1'-0"	4'-8"	12"	8" x 1'-4"	10.1 CY	362.7 TO 362.7	358.72	357.72	#5 @ 8"	6 - #4	#5 @ 8"	11 - #4	#5 @ 1'-4"
12+43.35 TO 12+55.35	25'-7 1/2" LT.	12'-0"	4.48'	8"	3'-0"	1'-0"	4'-8"	12"	8" x 1'-4"	3.4 CY	363.2 TO 363.2	358.72	357.72	#5 @ 8"	6 - #4	#5 @ 8"	11 - #4	#5 @ 1'-4"
12+55.35 TO 12+77.35	25'-7 5/8" LT.	22'-0"	4.98'	8"	3'-0"	1'-0"	4'-8"	12"	8" x 1'-4"	6.6 CY	363.7 TO 363.7	358.72	357.72	#5 @ 8"	6 - #4	#5 @ 8"	11 - #4	#5 @ 1'-4"
12+77.35 TO 13+23.67	25'-7 7/8" LT.	46'-4"	5.48' TO 4.48'	8"	3'-0"	1'-0"	4'-8"	12"	8" x 1'-4"	14.1 CY	364.2 TO 364.2	358.72 TO 359.72	357.72 TO 358.72	#5 @ 8"	6 - #4	#5 @ 8"	11 - #4	#5 @ 1'-4"
13+23.67 TO 13+23.50	25'-8 5/8" LT.	10'-6"	4.48' TO 5.50'	8"	3'-0"	1'-0"	4'-8"	12"	———	3.1 CY	364.2 TO 367.7	359.72 TO 362.2	358.72 TO 361.2	#5 @ 8"	6 - #4	#5 @ 8"	11 - #4	#5 @ 1'-4"
13+23.50 TO 13+23.44	36'-2 1/2" LT. TO 40'-2 1/2" LT.	4'-0"	5.50'	8"	3'-0"	1'-0"	4'-8"	12"	———	1.2 CY	367.7 TO 367.7	362.2	361.2	#5 @ 8"	6 - #4	#5 @ 8"	11 - #4	#5 @ 1'-4"

* STEM THICKNESS (Astem) IS THICKNESS OF CONCRETE WALL ONLY. Astem DOES NOT INCLUDE THICKNESS OF STONE VENEER ON WALL FRONT FACE.

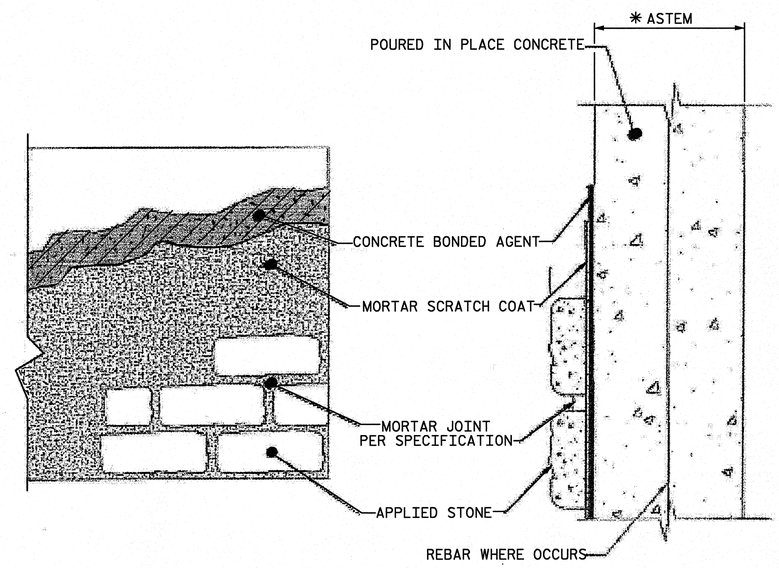

STONE VENEER INSTALLATION OVER POURED CONCRETE SURFACES

SPECIFICATIONS:

- CONCRETE BONDING AGENT: SURFACE APPLIED BONDING AGENTS THAT MEET ASTM C 1059 OR ASTM C 932. INTEGRALLY MIXED (IN MORTAR SCRATCH COAT) CAN BE USED SUCH THAT MORTAR ACHIEVES MINIMUM SHEAR BOND STRENGTH OF 50 PSI WHEN TESTED IN ACCORDANCE WITH ASTM C482. AS AN ALTERNATIVE TO CONCRETE BONDING AGENT, CORROSION RESISTANT MINIMUM 2.5 LBS. PER SQUARE YARD EXPANDED METAL LATH THAT COMPLIES WITH ASTM C 847 AND APPLIED WITH APPROPRIATE CONCRETE FASTNERS MAY BE USED. USE CONCRETE FASTENING PINS WITH WASHERS APPLIED WITH A POWDER ACTUATED FASTENING TOOL. PINS SHALL HAVE A MINIMUM SHANK LENGTH OF 3/4 IN. WITH A 0.145 IN. HEAD DIAMETER AND UTILIZE A 16 GAGE WASHER.
- MORTAR SCRATCH COAT AND MORTAR JOINTS (IF APPLICABLE), PROPORTIONS BY VOLUME:
  - PORTLAND TYPE I/II CEMENT ASTM C-150 (1 PART), MASOMRY TYPE-N CEMENT ASTM C-270 1 PART), MASONRY SAND ASTM C-144 (3 PARTS), WATER ADDED TO ACHIEVE FIRM, MOIST CONSISTENCY, PIGMENT (POWDER OR LIQUID) ASTM C979 OPTIONAL, OR
  - MASONRY TYPE-S CEMENT ASTM C270 (1 PART), MASONRY SAND ASTM C-144 (3 PARTS), WATER ADDED TO ACHIEVE FIRM, MOIST CONSISTENCY, PIGMENT (POWDER OR LIQUID) ASTM C979 OPTIONAL

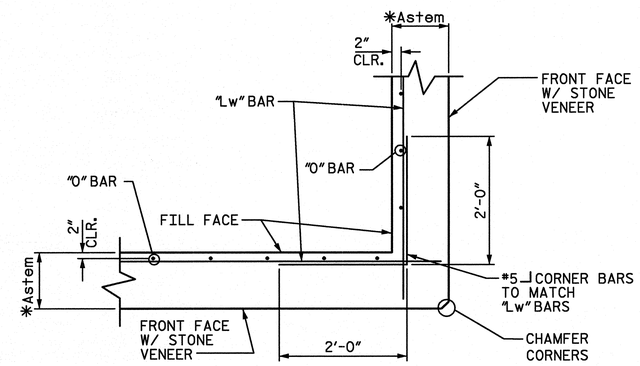

WALL CORNER DETAIL PLAN @ -L- STA. 12+06.35 & 13+23.67

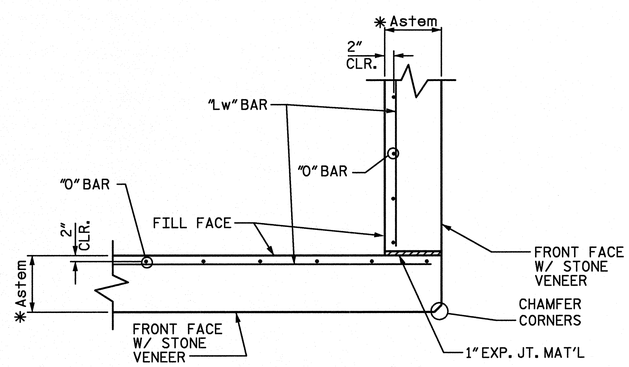

OPTIONAL-WALL CORNER DETAIL PLAN @ -L- STA. 12+06.35 & 13+23.67

REVISIONS

NO.	DATE	DESCRIPTION	BY

559 Jones Franklin Rd. Suite 164
Raleigh, N.C. 27606
Bus: 919 851 8077
Fax: 919 851 8107
License No.: F-0377
WETHERILL ENGINEERING

TRANSPORTATION PLANNING/DESIGN - BRIDGE/STRUCTURE DESIGN
CIVIL/SITE DESIGN - GIS/GPS - CONSTRUCTION OBSERVATION

Wall NO. 5 Details
Sta. 12+06.35 -L- to Sta. 13+23.44 -L-

Wait Ave
Town of Wake Forest
North Carolina

DATE: 12 - 2011
SCALE: NTS
DRAWN BY: GFW
CHECKED BY: JAD
SHEET: W5 3 OF 3
PROJ. NO.:

2/15/2012 8:20:49 AM
P:\2011\11360.06 Wait Ave Wake Forest\DGN\Wall DETAILS 5.dgn

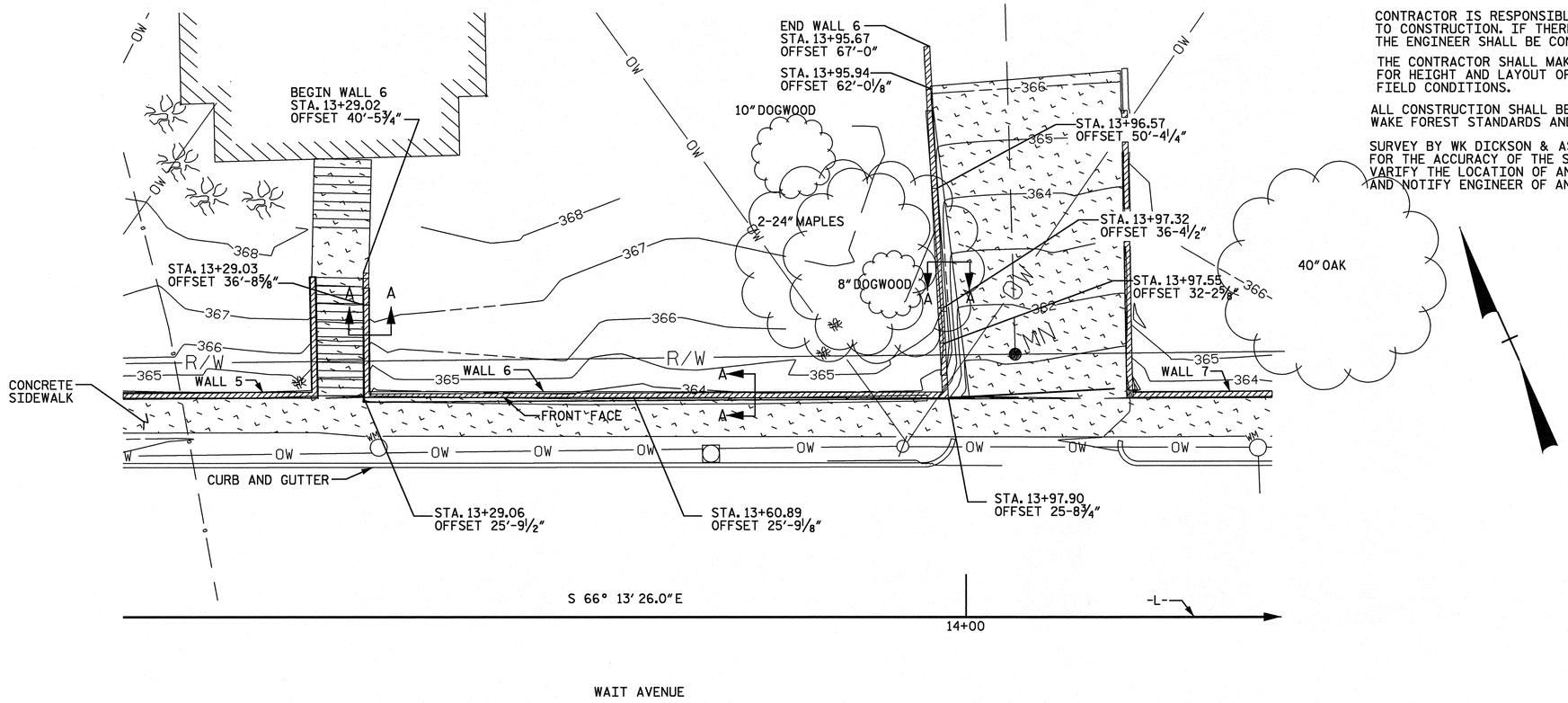

CONTRACTOR IS RESPONSIBLE FOR LOCATING UTILITIES PRIOR TO CONSTRUCTION. IF THERE ARE ANY DEVIANCE FROM THE PLANS THE ENGINEER SHALL BE CONTACTED.

THE CONTRACTOR SHALL MAKE FIELD ADJUSTMENTS AS NECESSARY FOR HEIGHT AND LAYOUT OF WALL AS TO BEST FIT EXISTING FIELD CONDITIONS.

ALL CONSTRUCTION SHALL BE IN ACCORDANCE WITH TOWN OF WAKE FOREST STANDARDS AND SPECIFICATIONS.

SURVEY BY WK DICKSON & ASSOCIATES. ENGINEERS NOT RESPONSIBLE FOR THE ACCURACY OF THE SURVEY. THE CONTRACTOR SHALL FIELD VARIFY THE LOCATION OF ANY EXISTING CONSTRUCTION CONFLICTS AND NOTIFY ENGINEER OF ANY DEVIATION FROM THIS SURVEY.

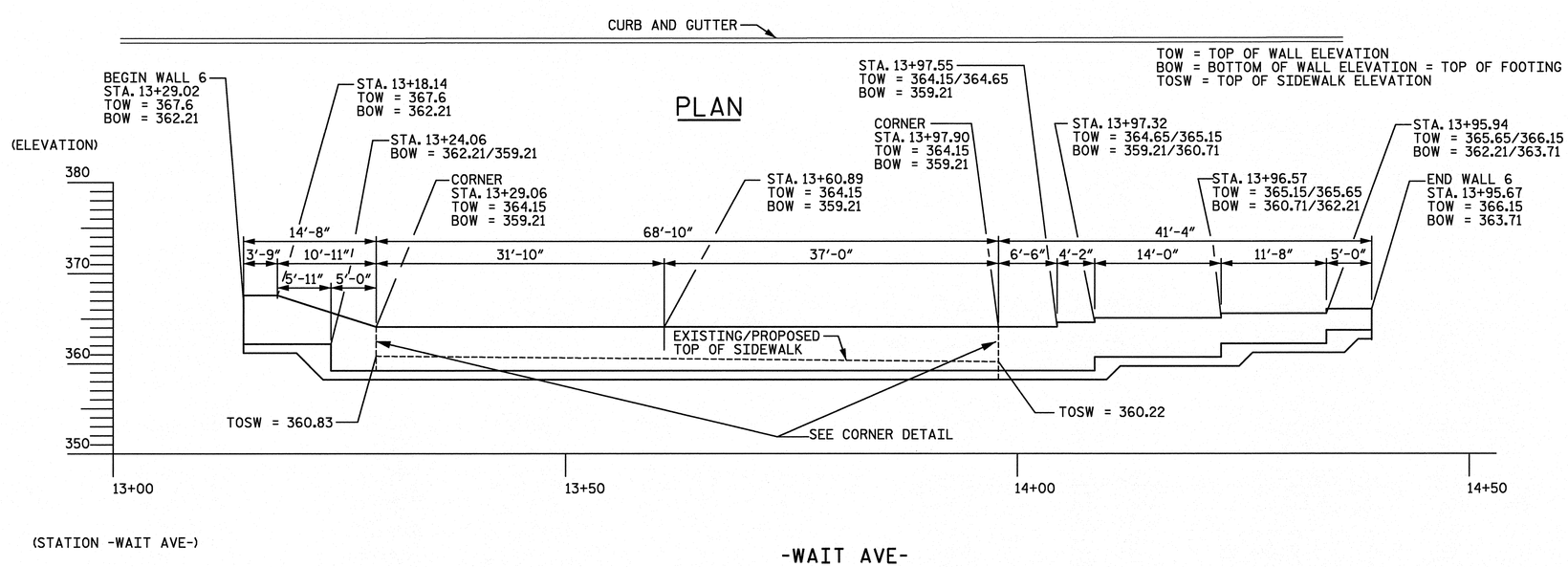

CANTILEVERED CONCRETE RETAINING WALL NO. 6 ELEVATION - FRONT FACE

NORTH CAROLINA PROFESSIONAL SEAL 22072 ENGINEER JOHN ARTHUR DICKSON III
2-15-12

REVISIONS

NO.	DATE	DESCRIPTION	BY

WETHERILL ENGINEERING
559 Jones Franklin Rd. Suite 164
Raleigh, N.C. 27606
Bus: 919 851 8077
Fax: 919 851 8107
License No.: F-0377

TRANSPORTATION PLANNING/DESIGN - BRIDGE/STRUCTURE DESIGN
CIVIL/SITE DESIGN - GIS/GPS - CONSTRUCTION OBSERVATION

WALL NO. 6 LAYOUT
Sta. 13+29.02 -L- to Sta. 13+95.67 -L-

Wait Ave
Town of Wake Forest
North Carolina

DATE: 12 - 2011
SCALE: NTS
DRAWN BY: GFW
CHECKED BY: JAD
SHEET: W6 1 OF 3
PROJ. NO.:

3/15/2012 9:21:28 AM
P:\2011\11360.06 Wait Ave Wake Forest\DGN\Wall 6.dgn

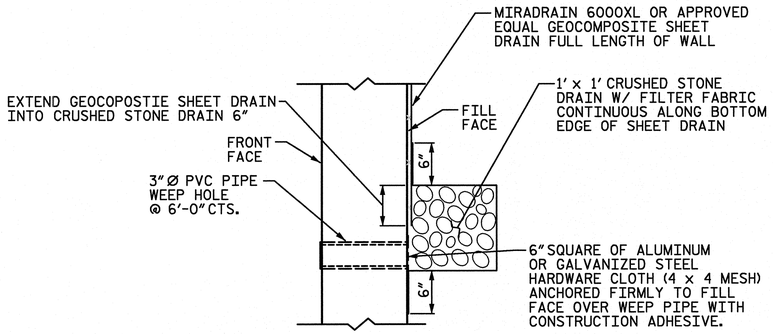

WALL DRAIN DETAIL

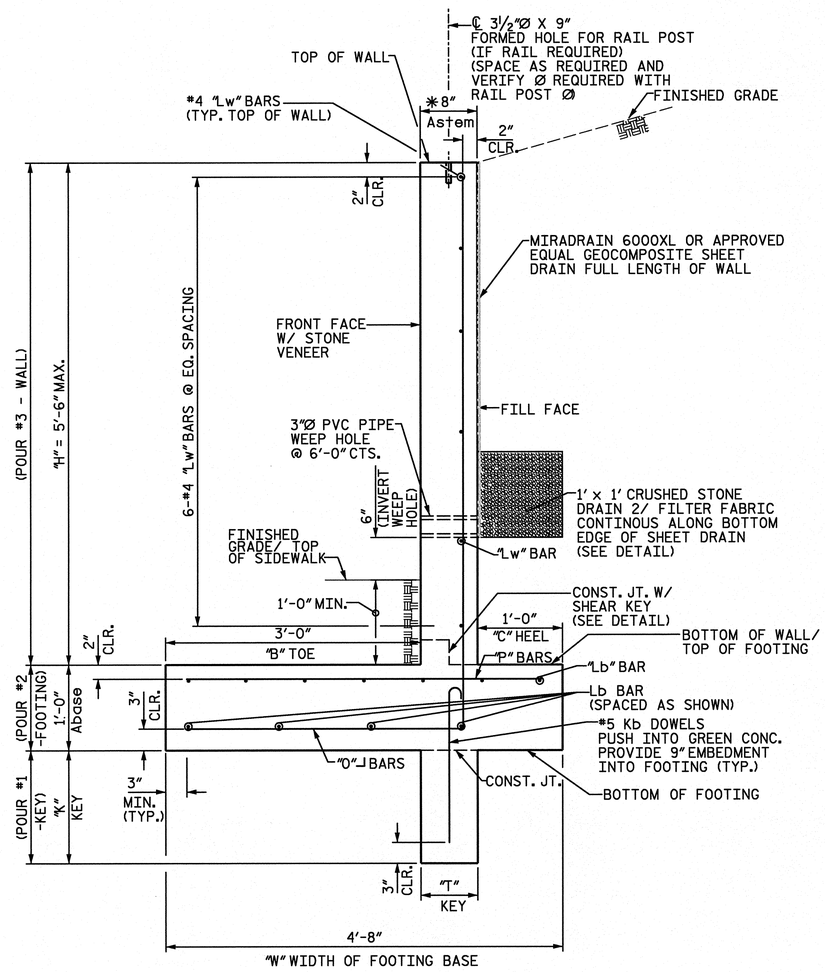

SECTION A-A

CANTILEVERED CONCRETE RETAINING WALL
STATION 13+29.03 -L- TO STATION 13+96.08 -L-

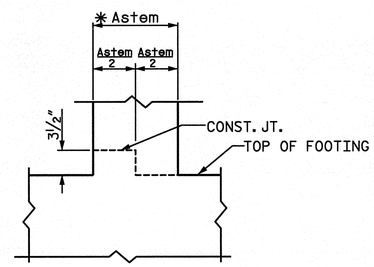

SHEAR KEY DETAIL

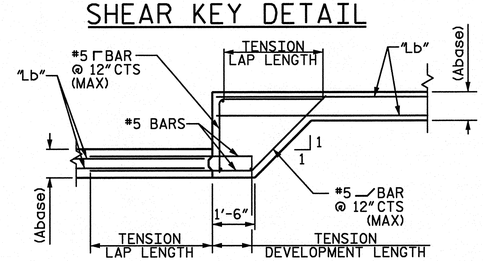

FOOTING STEP DETAIL

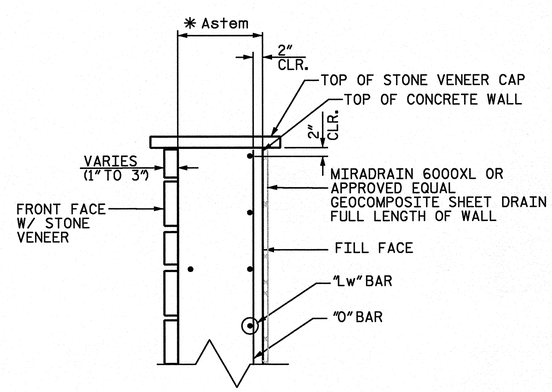

STONE VENEER FRONT FACE

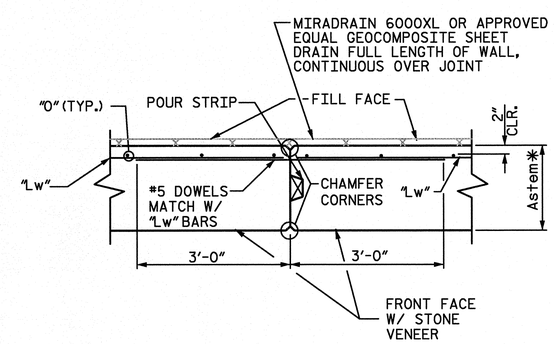

VERTICAL CONSTRUCTION JOINT WALL PLAN VIEW

GENERAL ENGINEERING NOTES

1. ALL APPLIED LOADS AND LOAD COMBINATIONS ARE IN ACCORDANCE WITH THE NORTH CAROLINA BUILDING CODE 2006 EDITION AND 17TH EDITION OF AASHTO STANDARD SPECIFICATIONS FOR HIGHWAY BRIDGES.
2. CONTRACTOR SHALL HAVE A GEOTECHNICAL ENGINEER FIELD VERIFY THE BEARING CAPACITY OF THE SOIL FOR THE WALL FOOTINGS. SOILS SHALL BE SUITABLE FOR PROVIDING THE REQUIRED BEARING CAPACITY OF 2,000 PSF WITH A MINIMUM FACTOR OF SAFETY OF 3.
3. DESIGN PARAMETERS:
   SOIL WEIGHT = 120 PCF
   EQUIVALENT FLUID PRESSURE = 48 PCF
   Ka = 0.400
   COEFFICIENT OF FRICTION = 0.32
   ALLOWABLE BEARING CAPACITY = 2,000 PSF
4. SITE PREPARATION AND SOIL CONDITIONING DURING CONSTRUCTION ARE THE RESPONSIBILITY OF THE CONTRACTOR.
5. THE MINIMUM 28 DAY COMPRESSION STRENGTH OF CONCRETE SHALL BE 3,000 PSI.
6. ALL REINFORCING STEEL SHALL BE ASTM A615, GRADE 60 DEFORMED BARS. FY=60 KSI. ALL REINFORCING SHALL BE PLACED IN ACCORDANCE WITH LATEST EDITION OF ACI318 AND ACI315. MINIMUM SPLICE LENGTHS SHALL BE 40 BAR DIAMETERS.
7. ALL CONTRACTION JOINTS (CONTROL JOINTS) SHALL BE NO GREATER THAN 25' APART. JOINT DEPTH SHALL BE 1" DEEP BY ¼" WIDE ON BOTH FACES.
8. CONTRACTOR SHALL CONSTRUCT THE WALL AS SHOWN IN THESE PLANS. ANY AND ALL MODIFICATIONS SHALL BE APPROVED BY THE ENGINEER IN WRITING PRIOR TO CONSTRUCTION.
9. CONTRACTOR SHALL BE RESPONSIBLE FOR COMPILING WITH ALL LOCAL, STATE AND FEDERAL REGULATIONS.
10. CONTRACTOR SHALL THOUROUGHLY REVIEW PLANS AND SPECIFICATIONS PRIOR TO CONSTRUCTION. REQUEST FOR ADDITIONAL INFORMATION AND CLARIFICATIONS SHALL BE MADE TO THE ENGINEER IN WRITING.
11. PVC PIPE SHALL BE SCHEDULE 40 AND SHALL CONFORM TO THE REQUIREMENTS OF THE ASTM D-1785.
12. GEOCOMPOSITE SHEET DRAIN SHALL BE MIRADRAIN 6000XL OR APPROVED EQUAL. GEOCOMPOSITE SHEET DRAIN SHALL BE INSTALLED IN ACCORDANCE WITH MANUFACTURER'S REQUIREMENTS.
13. UNLESS OTHERWISE NOTED ON THE PLANS, ALL EXPOSED CORNERS ON STRUCTURES SHALL BE CHAMFERED ¾".
14. EXISTING SIDEWALK IS TO BE REMOVED. PROPOSED SIDEWALK SHALL BE PLACED AT THE ELEVATION AND LOCATION OF THE PREVIOUS SIDEWALK.
15. A 42" TALL GUARDRAIL SHALL BE REQUIRED AT ALL LOCATIONS WHERE THE RETAINING WALL HEIGHT IS 30" OR GREATER ABOVE FINISHED GRADE.

* STEM THICKNESS (Astem) IS THICKNESS OF CONCRETE WALL ONLY. Astem DOES NOT INCLUDE THICKNESS OF STONE VENEER ON WALL FRONT FACE.

NORTH CAROLINA PROFESSIONAL SEAL 22072 ENGINEER JOHN ARTHUR DILWORTH
2-15-12

REVISIONS

NO.	DATE	DESCRIPTION	BY

WETHERILL ENGINEERING
559 Jones Franklin Rd. Suite 164
Raleigh, N.C. 27606
Bus: 919 851 8077
Fax: 919 851 8107
License No.: F-0377

TRANSPORTATION PLANNING/DESIGN - BRIDGE/STRUCTURE DESIGN
CIVIL/SITE DESIGN - GIS/GPS - CONSTRUCTION OBSERVATION

Wall No. 6 Details
Sta. 13+29.02 -L- to Sta. 13+95.67 -L-

Wait Ave
Town of Wake Forest
North Carolina

DATE: 12 - 2011
SCALE: NTS
DRAWN BY: GFW
CHECKED BY: JAD
SHEET: W6 2 OF 3
PROJ. NO.:

2/15/2012
3:21:58 PM
P:\2011\11360.06 Wait Ave Wake Forest\DGN\Wall DETAILS 6.dgn

CANTILEVERED CONCRETE RETAINING WALL NO. 6

STATION TO STATION	CONCRETE DIMENSIONS & VOLUMES: OFFSET FROM -L-	WALL SECTION LENGTH	MAX. WALL HEIGHT ABOVE TOP OF FOOTING BASE (H)	* STEM THICKNESS (Astem)	TOE (B)	HEEL (C)	WIDTH OF BASE (W)	HEIGHT OF FOOTING (Abase)	KEY (T MIN. x K)	CONCRETE QUANTITY	ELEVATIONS: TOP OF WALL EL.	BOTTOM OF WALL /TOP OF FOOTING EL.	BOTTOM OF FOOTING EL.	STEM REINFORCEMENT: "O" BARS SIZE @ IN.	"Lw" BARS *BARS -SIZE	FOOTING REINFORCEMENT: "P" BARS SIZE @ IN.	"Lb" BARS *BARS -SIZE	"Kb" BARS SIZE @ IN.
-L- 13+29.02 TO 13+29.03	40'-5¾"LT.	3'-9"	5.39'	8"	3'-0"	1'-0"	4'-8"	12"	——	1.2 CY	367.6 TO 367.6	362.21	361.21	#5 @ 8"	6 - #4	#5 @ 8"	11 - #4	#5 @ 1'-4"
13+29.03 TO 13+29.06	36'-8⅝"LT.	10'-11"	5.39' TO 4.94'	8"	3'-0"	1'-0"	4'-8"	12"	——	3.3 CY	367.6 TO 364.15	362.21 TO 359.21	361.21 TO 358.21	#5 @ 8"	6 - #4	#5 @ 8"	11 - #4	#5 @ 1'-4"
13+29.06 TO 13+60.89	25'-9½"LT.	31'-10"	4.94'	8"	3'-0"	1'-0"	4'-8"	12"	8" x 1'-4"	9.5 CY	364.15 TO 364.15	359.21	358.21	#5 @ 8"	6 - #4	#5 @ 8"	11 - #4	#5 @ 1'-4"
13+60.89 TO 13+97.90	25'-9⅛"LT.	37'-0"	4.94'	8"	3'-0"	1'-0"	4'-8"	12"	8" x 1'-4"	11.0 CY	364.15 TO 364.15	359.21	358.21	#5 @ 8"	6 - #4	#5 @ 8"	11 - #4	#5 @ 1'-4"
13+97.90 TO 13+97.55	25'-8¾"LT.	6'-6"	4.94'	8"	3'-0"	1'-0"	4'-8"	12"	8" x 1'-4"	1.9 CY	364.15 TO 364.15	359.21	358.21	#5 @ 8"	6 - #4	#5 @ 8"	11 - #4	#5 @ 1'-4"
13+97.55 TO 13+97.32	32'-2⅝"LT.	4'-2"	5.44'	8"	3'-0"	1'-0"	4'-8"	12"	8" x 1'-4"	1.3 CY	364.65 TO 364.65	359.21	358.21	#5 @ 8"	6 - #4	#5 @ 8"	11 - #4	#5 @ 1'-4"
13+97.32 TO 13+96.57	36'-4½"LT.	14'-0"	4.44'	8"	3'-0"	1'-0"	4'-8"	12"	8" x 1'-4"	4.0 CY	365.15 TO 365.15	360.17	359.17	#5 @ 8"	6 - #4	#5 @ 8"	11 - #4	#5 @ 1'-4"
13+96.57 TO 13+95.94	50'-4¼"LT.	11'-8"	3.44'	8"	3'-0"	1'-0"	4'-8"	12"	8" x 6"	3.0 CY	365.65 TO 365.65	362.21	361.21	#5 @ 8"	6 - #4	#5 @ 8"	11 - #4	#5 @ 1'-4"
13+95.94 TO 13+95.67	62'-0⅛"LT. TO 67'-0"LT.	5'-0"	2.44'	8"	3'-0"	1'-0"	4'-8"	12"	——	1.2 CY	366.15 TO 366.15	363.71	362.71	#5 @ 8"	6 - #4	#5 @ 8"	11 - #4	#5 @ 1'-4"

* STEM THICKNESS (Astem) IS THICKNESS OF CONCRETE WALL ONLY. Astem DOES NOT INCLUDE THICKNESS OF STONE VENEER ON WALL FRONT FACE.

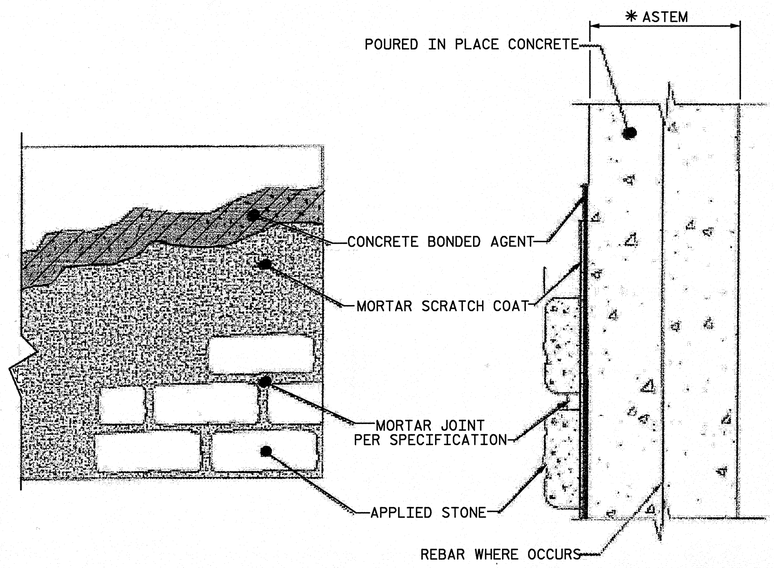

STONE VENEER INSTALLATION OVER POURED CONCRETE SURFACES

SPECIFICATIONS:

- CONCRETE BONDING AGENT: SURFACE APPLIED BONDING AGENTS THAT MEET ASTM C 1059 OR ASTM C 932. INTEGRALLY MIXED (IN MORTAR SCRATCH COAT) CAN BE USED SUCH THAT MORTAR ACHIEVES MINIMUM SHEAR BOND STRENGTH OF 50 PSI WHEN TESTED IN ACCORDANCE WITH ASTM C482. AS AN ALTERNATIVE TO CONCRETE BONDING AGENT, CORROSION RESISTANT MINIMUM 2.5 LBS. PER SQUARE YARD EXPANDED METAL LATH THAT COMPLIES WITH ASTM C 847 AND APPLIED WITH APPROPRIATE CONCRETE FASTNERS MAY BE USED. USE CONCRETE FASTENING PINS WITH WASHERS APPLIED WITH A POWDER ACTUATED FASTENING TOOL. PINS SHALL HAVE A MINIMUM SHANK LENGTH OF ¾IN. WITH A 0.145 IN. HEAD DIAMETER AND UTILIZE A 16 GAGE WASHER.
- MORTAR SCRATCH COAT AND MORTAR JOINTS (IF APPLICABLE), PROPORTIONS BY VOLUME:
  - PORTLAND TYPE I/II CEMENT ASTM C-150 (1 PART), MASOMRY TYPE-N CEMENT ASTM C-270 1 PART), MASONRY SAND ASTM C-144 (3 PARTS), WATER ADDED TO ACHIEVE FIRM, MOIST CONSISTENCY, PIGMENT (POWDER OR LIQUID) ASTM C979 OPTIONAL, OR
  - MASONRY TYPE-S CEMENT ASTM C270 (1 PART), MASONRY SAND ASTM C-144 (3 PARTS), WATER ADDED TO ACHIEVE FIRM, MOIST CONSISTENCY, PIGMENT (POWDER OR LIQUID) ASTM C979 OPTIONAL

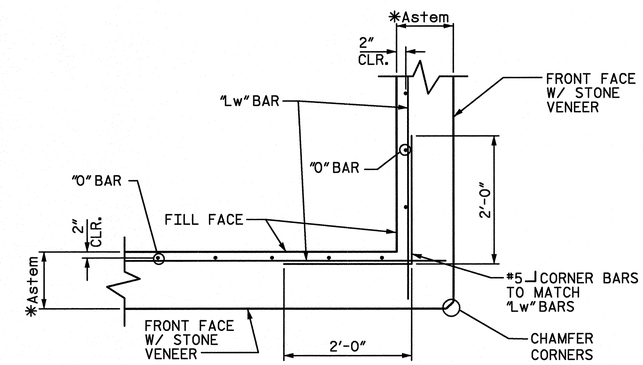

WALL CORNER DETAIL PLAN @ -L- STA. 13+29.06 & 14+00.35

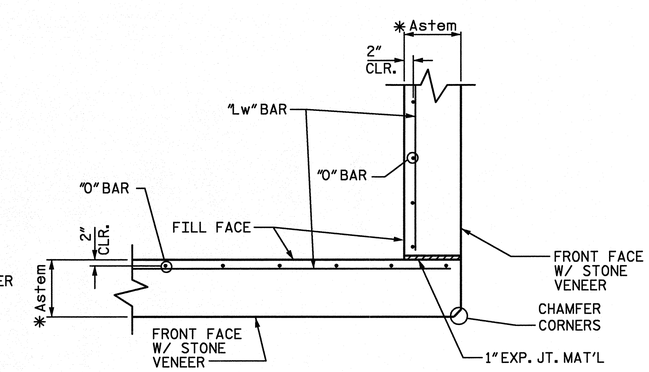

OPTIONAL-WALL CORNER DETAIL PLAN @ -L- STA. 13+29.06 & 14+00.35

REVISIONS

NO.	DATE	DESCRIPTION	BY

NORTH CAROLINA PROFESSIONAL SEAL 22072 ENGINEER JOHN ARTHUR DEES JR. 2-15-12

559 Jones Franklin Rd. Suite 164
Raleigh, N.C. 27606
Bus: 919 851 8077
Fax: 919 851 8107
License No.: F-0377
ETHERILL ENGINEERING

TRANSPORTATION PLANNING/DESIGN - BRIDGE/STRUCTURE DESIGN
CIVIL/SITE DESIGN - GIS/GPS - CONSTRUCTION OBSERVATION

Wall No. 6 Details
Sta. 13+29.02 -L- to Sta. 13+95.67-L-

Wait Ave
Town of Wake Forest
North Carolina

DATE: 12 - 2011
SCALE: NTS
DRAWN BY: GFW
CHECKED BY: JAD
SHEET: WG 3 OF 3
PROJ. NO.:

2/15/2012
3:22:10 AM
P:\2011\11360.06 Wait Ave Wake Forest\DGN\Wall DETAILS 6.dgn

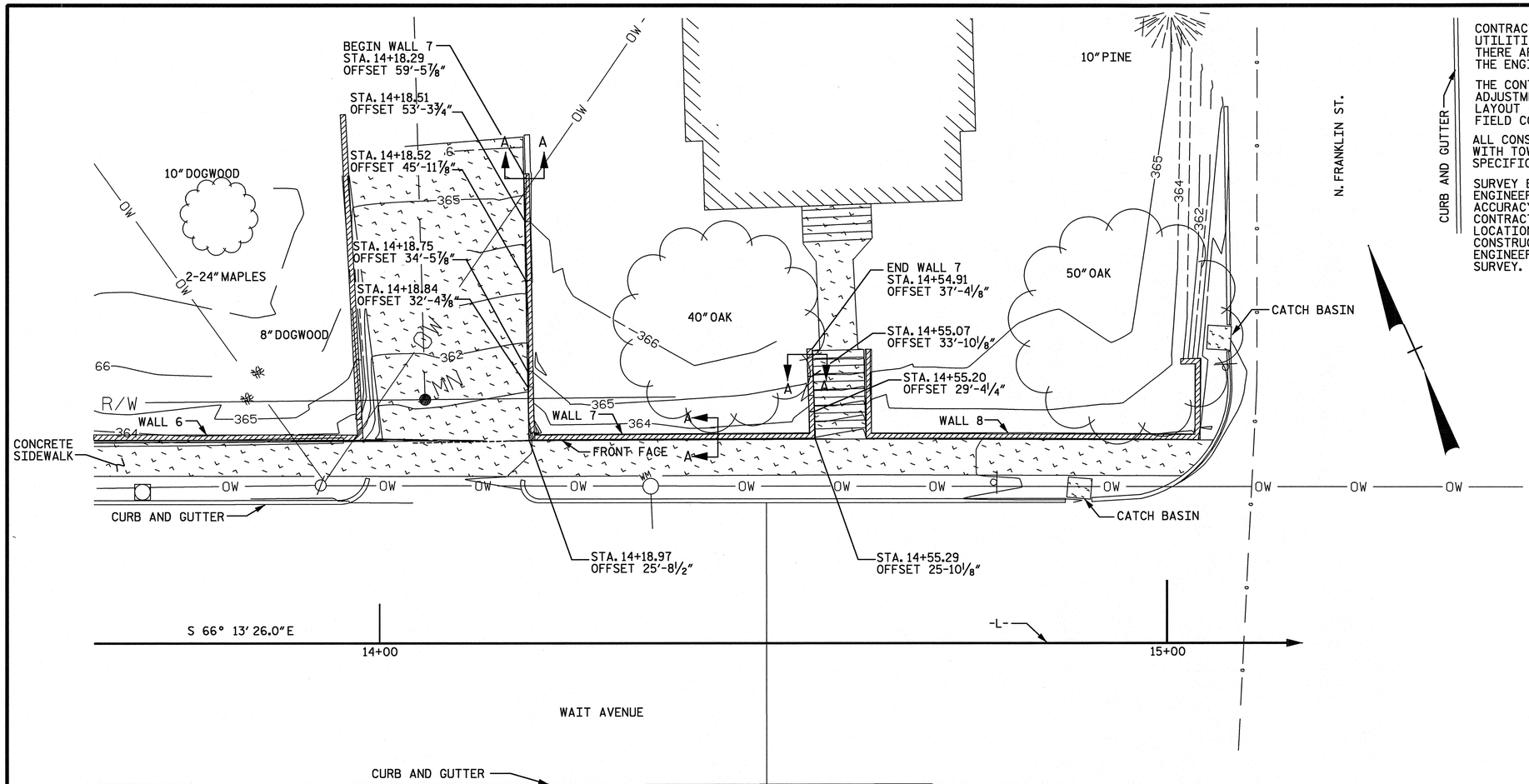

CONTRACTOR IS RESPONSIBLE FOR LOCATING UTILITIES PRIOR TO CONSTRUCTION. IF THERE ARE ANY DEVIANCE FROM THE PLANS THE ENGINEER SHALL BE CONTACTED.

THE CONTRACTOR SHALL MAKE FIELD ADJUSTMENTS AS NECESSARY FOR HEIGHT AND LAYOUT OF WALL AS TO BEST FIT EXISTING FIELD CONDITIONS.

ALL CONSTRUCTION SHALL BE IN ACCORDANCE WITH TOWN OF WAKE FOREST STANDARDS AND SPECIFICATIONS.

SURVEY BY WK DICKSON & ASSOCIATES. ENGINEERS NOT RESPONSIBLE FOR THE ACCURACY OF THE SURVEY. THE CONTRACTOR SHALL FIELD VARIFY THE LOCATION OF ANY EXISTING CONSTRUCTION CONFLICTS AND NOTIFY ENGINEER OF ANY DEVIATION FROM THIS SURVEY.

PLAN

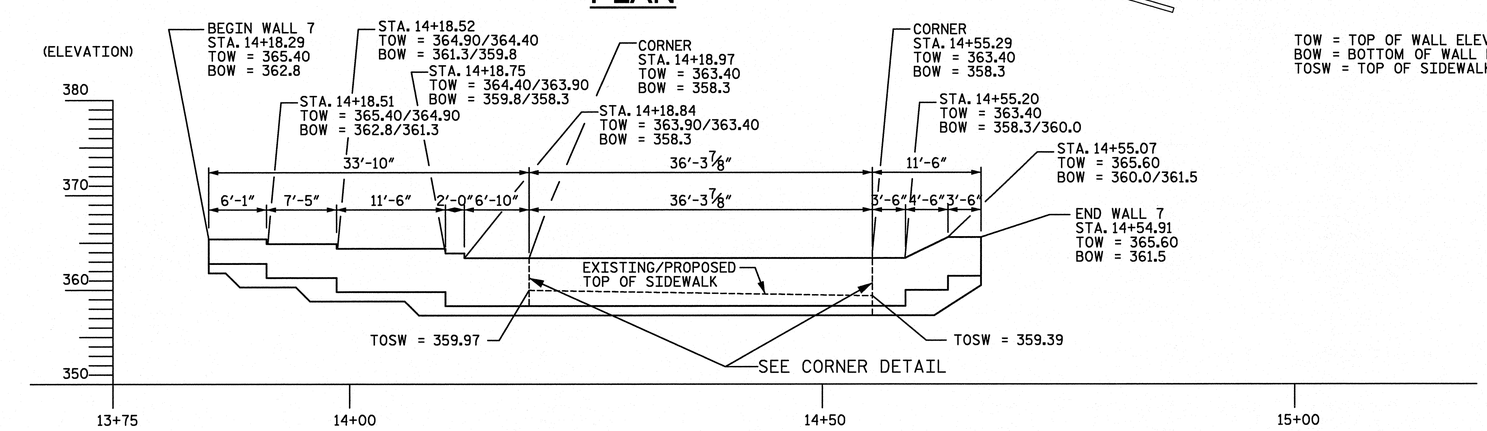

TOW = TOP OF WALL ELEVATION
BOW = BOTTOM OF WALL ELEVATION = TOP OF FOOTING
TOSW = TOP OF SIDEWALK ELEVATION

(STATION -WAIT AVE-)

-WAIT AVE-

CANTILEVERED CONCRETE RETAINING WALL NO. 7 ELEVATION - FRONT FACE

NORTH CAROLINA PROFESSIONAL SEAL 22072 ENGINEER JOHN ARTHUR DICKSON 2-15-12

REVISIONS

NO.	DATE	DESCRIPTION	BY

WETHERILL ENGINEERING
559 Jones Franklin Rd. Suite 164
Raleigh, N.C. 27606
Bus: 919 851 8077
Fax: 919 851 8107
License No.: F-0377

TRANSPORTATION PLANNING/DESIGN - BRIDGE/STRUCTURE DESIGN
CIVIL/SITE DESIGN - GIS/GPS - CONSTRUCTION OBSERVATION

WALL NO. 7
Sta. 14+18.29 -L- to Sta. 14+54.91 -L-

Wait Ave
Town of Wake Forest
North Carolina

DATE: 12 - 2011
SCALE: NTS
DRAWN BY: GFW
CHECKED BY: JAD
SHEET: W7 1 OF 3
PROJ. NO.:

2/15/2012
9:25:53 AM
P:\2011\11360.06 Wait Ave Wake Forest\DGN\Wall 7.dgn

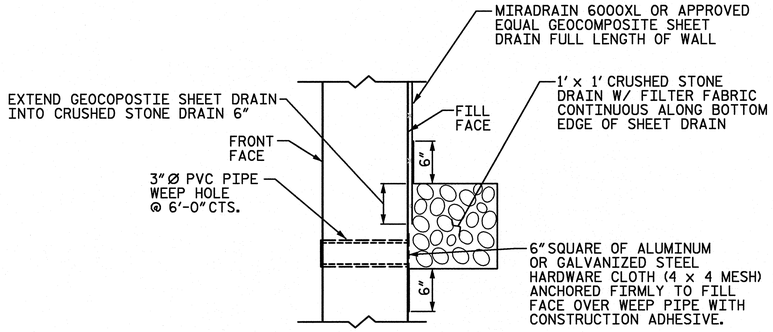

WALL DRAIN DETAIL

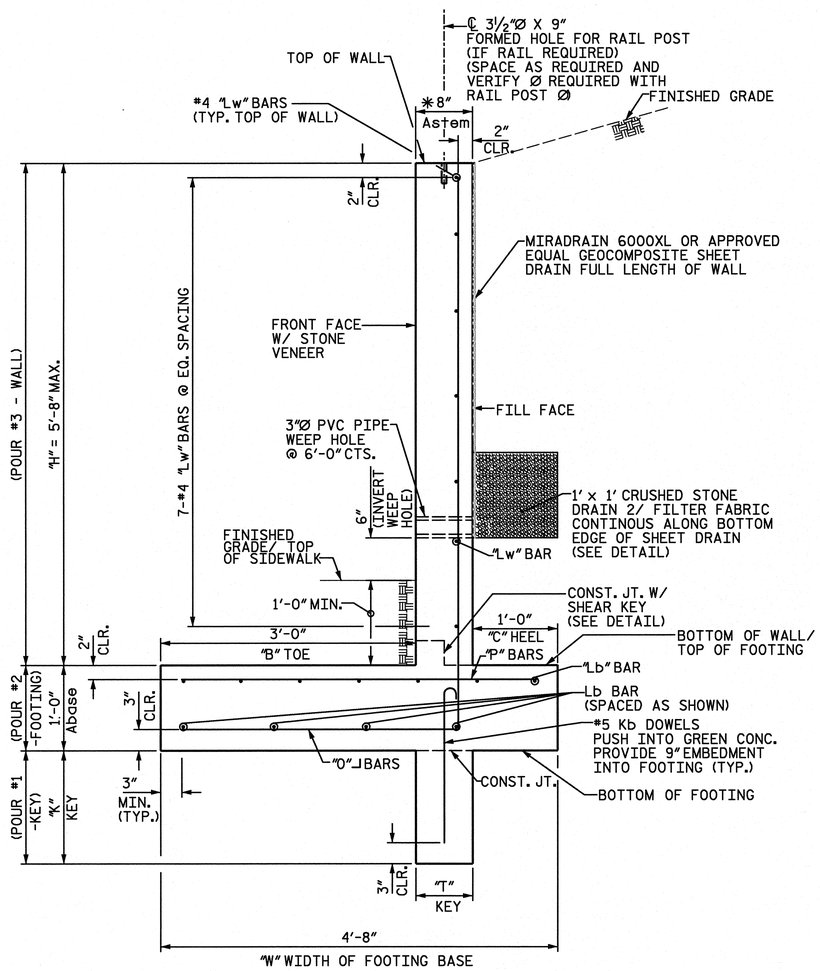

SECTION A-A

CANTILEVERED CONCRETE RETAINING WALL
STATION 14+18.20 -L- TO STATION 14+54.91 -L-

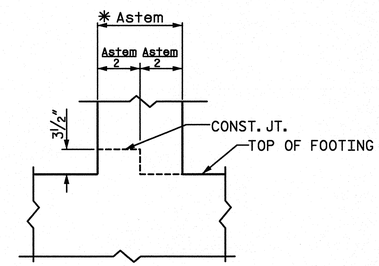

SHEAR KEY DETAIL

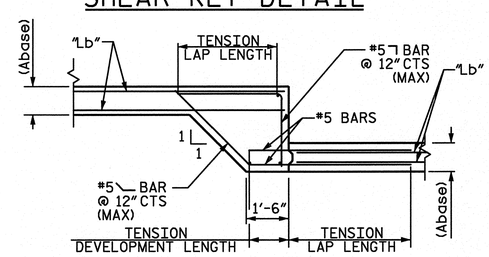

FOOTING STEP DETAIL

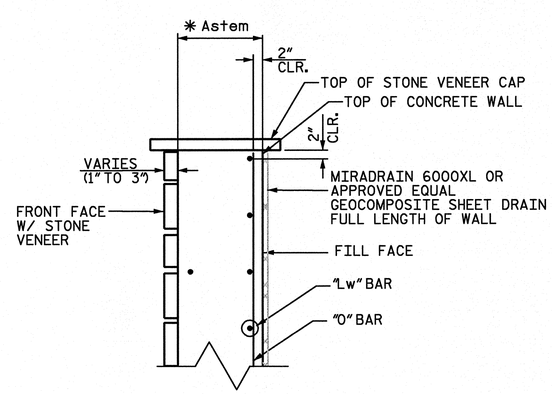

STONE VENEER FRONT FACE

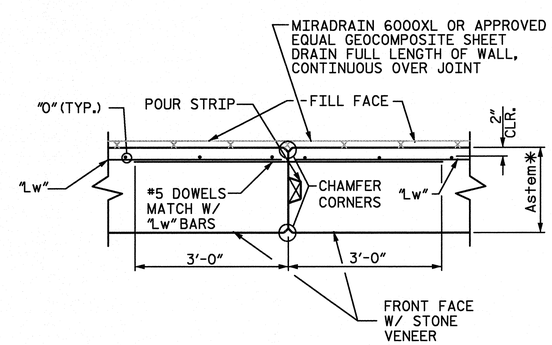

VERTICAL CONSTRUCTION JOINT WALL PLAN VIEW

GENERAL ENGINEERING NOTES

1. ALL APPLIED LOADS AND LOAD COMBINATIONS ARE IN ACCORDANCE WITH THE NORTH CAROLINA BUILDING CODE 2006 EDITION AND 17TH EDITION OF AASHTO STANDARD SPECIFICATIONS FOR HIGHWAY BRIDGES.
2. CONTRACTOR SHALL HAVE A GEOTECHNICAL ENGINEER FIELD VERIFY THE BEARING CAPACITY OF THE SOIL FOR THE WALL FOOTINGS. SOILS SHALL BE SUITABLE FOR PROVIDING THE REQUIRED BEARING CAPACITY OF 2,000 PSF WITH A MINIMUM FACTOR OF SAFETY OF 3.
3. DESIGN PARAMETERS:
   SOIL WEIGHT = 120 PCF
   EQUIVALENT FLUID PRESSURE = 48 PCF
   Ka = 0.400
   COEFFICIENT OF FRICTION = 0.32
   ALLOWABLE BEARING CAPACITY = 2,000 PSF
4. SITE PREPARATION AND SOIL CONDITIONING DURING CONSTRUCTION ARE THE RESPONSIBILITY OF THE CONTRACTOR.
5. THE MINIMUM 28 DAY COMPRESSION STRENGTH OF CONCRETE SHALL BE 3,000 PSI.
6. ALL REINFORCING STEEL SHALL BE ASTM A615, GRADE 60 DEFORMED BARS. FY=60 KSI. ALL REINFORCING SHALL BE PLACED IN ACCORDANCE WITH LATEST EDITION OF ACI318 AND ACI315. MINIMUM SPLICE LENGTHS SHALL BE 40 BAR DIAMETERS.
7. ALL CONTRACTION JOINTS (CONTROL JOINTS) SHALL BE NO GREATER THAN 25' APART. JOINT DEPTH SHALL BE 1" DEEP BY ¼" WIDE ON BOTH FACES.
8. CONTRACTOR SHALL CONSTRUCT THE WALL AS SHOWN IN THESE PLANS. ANY AND ALL MODIFICATIONS SHALL BE APPROVED BY THE ENGINEER IN WRITING PRIOR TO CONSTRUCTION.
9. CONTRACTOR SHALL BE RESPONSIBLE FOR COMPILING WITH ALL LOCAL, STATE AND FEDERAL REGULATIONS.
10. CONTRACTOR SHALL THOUROUGHLY REVIEW PLANS AND SPECIFICATIONS PRIOR TO CONSTRUCTION. REQUEST FOR ADDITIONAL INFORMATION AND CLARIFICATIONS SHALL BE MADE TO THE ENGINEER IN WRITING.
11. PVC PIPE SHALL BE SCHEDULE 40 AND SHALL CONFORM TO THE REQUIREMENTS OF THE ASTM D-1785.
12. GEOCOMPOSITE SHEET DRAIN SHALL BE MIRADRAIN 6000XL OR APPROVED EQUAL. GEOCOMPOSITE SHEET DRAIN SHALL BE INSTALLED IN ACCORDANCE WITH MANUFACTURER'S REQUIREMENTS.
13. UNLESS OTHERWISE NOTED ON THE PLANS, ALL EXPOSED CORNERS ON STRUCTURES SHALL BE CHAMFERED ¾".
14. EXISTING SIDEWALK IS TO BE REMOVED. PROPOSED SIDEWALK SHALL BE PLACED AT THE ELEVATION AND LOCATION OF THE PREVIOUS SIDEWALK.
15. A 42" TALL GUARDRAIL SHALL BE REQUIRED AT ALL LOCATIONS WHERE THE RETAINING WALL HEIGHT IS 30" OR GREATER ABOVE FINISHED GRADE.

* STEM THICKNESS (Astem) IS THICKNESS OF CONCRETE WALL ONLY. Astem DOES NOT INCLUDE THICKNESS OF STONE VENEER ON WALL FRONT FACE.

NORTH CAROLINA PROFESSIONAL SEAL 22072 ENGINEER JOHN ARTHUR DIXON
2-15-12

REVISIONS

NO.	DATE	DESCRIPTION	BY

WETHERILL ENGINEERING
559 Jones Franklin Rd. Suite 164
Raleigh, N.C. 27606
Bus: 919 851 8077
Fax: 919 851 8107
License No.: F-0377

TRANSPORTATION PLANNING/DESIGN - BRIDGE/STRUCTURE DESIGN
CIVIL/SITE DESIGN - GIS/GPS - CONSTRUCTION OBSERVATION

Wall NO. 7 Details
Sta. 14+18.29 -L- to Sta. 14+54.91 -L-

Wait Ave
Town of Wake Forest
North Carolina

DATE: 12 - 2011
SCALE: NTS
DRAWN BY: GFW
CHECKED BY: JAD
SHEET: W7 2 OF 3
PROJ. NO.:

2/15/2012
9:26:31 AM
P:\2011\11360.06 Wait Ave Wake Forest\DGN\Wall DETAILS 7.dgn

CANTILEVERED CONCRETE RETAINING WALL NO. 7

STATION TO STATION	CONCRETE DIMENSIONS & VOLUMES: OFFSET FROM -L-	WALL SECTION LENGTH	MAX. WALL HEIGHT ABOVE TOP OF FOOTING BASE (H)	* STEM THICKNESS (Astem)	TOE (B)	HEEL (C)	WIDTH OF BASE (W)	HEIGHT OF FOOTING (Abase)	KEY (T MIN. x K)	CONCRETE QUANTITY	ELEVATIONS: TOP OF WALL EL.	BOTTOM OF WALL /TOP OF FOOTING EL.	BOTTOM OF FOOTING EL.	STEM REINFORCEMENT: "O" BARS SIZE @ IN.	"Lw" BARS *BARS -SIZE	FOOTING REINFORCEMENT: "P" BARS SIZE @ IN.	"Lb" BARS *BARS -SIZE	"Kb" BARS SIZE @ IN.
-L- 14+18.29 TO 14+18.51	59'-5 7/8" LT.	6'-1"	2.60'	8"	3'-0"	1'-0"	4'-8"	12"	8" x 1'-4"	1.5 CY	365.40 TO 365.40	362.8	361.8	#5 @ 8"	7 - #4	#5 @ 8"	11 - #4	#5 @ 1'-4"
14+18.51 TO 14+18.52	53'-3 3/4" LT.	7'-5"	3.60'	8"	3'-0"	1'-0"	4'-8"	12"	8" x 1'-4"	2.0 CY	364.90 TO 364.90	361.3	360.3	#5 @ 8"	7 - #4	#5 @ 8"	11 - #4	#5 @ 1'-4"
14+18.52 TO 14+18.75	45'-11 7/8" LT.	11'-6"	4.60'	8"	3'-0"	1'-0"	4'-8"	12"	8" x 1'-4"	3.3 CY	364.4 TO 364.4	359.8	358.8	#5 @ 8"	7 - #4	#5 @ 8"	11 - #4	#5 @ 1'-4"
14+18.75 TO 14+18.84	34'-5 7/8" LT.	2'-0"	5.60'	8"	3'-0"	1'-0"	4'-8"	12"	8" x 1'-4"	0.6 CY	363.90 TO 363.90	358.3	357.3	#5 @ 8"	7 - #4	#5 @ 8"	11 - #4	#5 @ 1'-4"
14+18.84 TO 14+18.97	32'-4 3/8" LT.	6'-10"	5.10'	8"	3'-0"	1'-0"	4'-8"	12"	8" x 1'-4"	2.1 CY	363.40 TO 363.40	358.3	357.3	#5 @ 8"	7 - #4	#5 @ 8"	11 - #4	#5 @ 1'-4"
14+18.97 TO 14+55.29	25'-8 1/2" LT.	36'-3 7/8"	5.10'	8"	3'-0"	1'-0"	4'-8"	12"	8" x 1'-4"	11.0 CY	363.40 TO 363.40	358.3	357.3	#5 @ 8"	7 - #4	#5 @ 8"	11 - #4	#5 @ 1'-4"
14+55.29 TO 14+55.20	25'-10 1/8" LT.	3'-6"	5.10'	8"	3'-0"	1'-0"	4'-8"	12"	———	1.1 CY	363.40 TO 363.40	358.3	357.3	#5 @ 8"	7 - #4	#5 @ 8"	11 - #4	#5 @ 1'-4"
14+55.20 TO 14+55.07	29'-4 1/4" LT.	4'-6"	3.40' TO 5.60'	8"	3'-0"	1'-0"	4'-8"	12"	———	1.3 CY	363.40 TO 356.60	360.0	359.0	#5 @ 8"	7 - #4	#5 @ 8"	11 - #4	#5 @ 1'-4"
14+55.07 TO 14+54.91	33'-10 1/8" LT. TO 37'-4 1/8" LT.	3'-6"	4.10'	8"	3'-0"	1'-0"	4'-8"	12"	———	1.0 CY	365.60 TO 365.60	361.5	360.5	#5 @ 8"	7 - #4	#5 @ 8"	11 - #4	#5 @ 1'-4"

* STEM THICKNESS (Astem) IS THICKNESS OF CONCRETE WALL ONLY. Astem DOES NOT INCLUDE THICKNESS OF STONE VENEER ON WALL FRONT FACE.

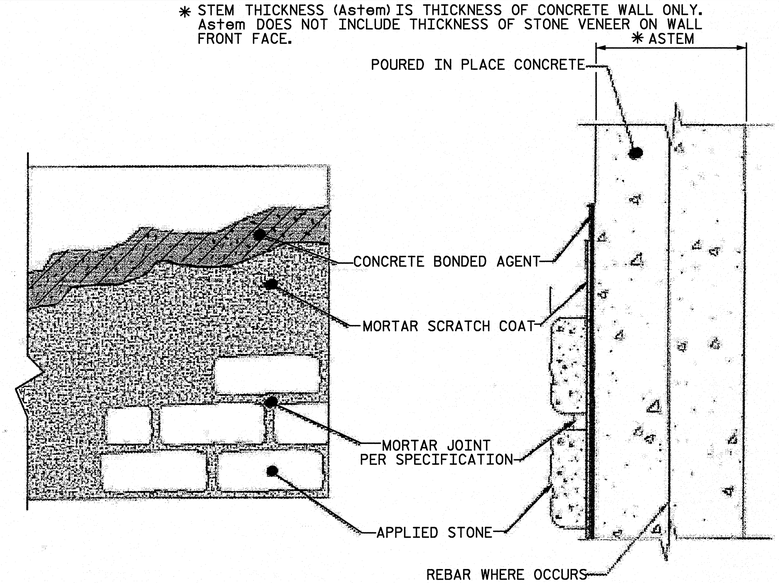

STONE VENEER INSTALLATION OVER POURED CONCRETE SURFACES

SPECIFICATIONS:

- CONCRETE BONDING AGENT: SURFACE APPLIED BONDING AGENTS THAT MEET ASTM C 1059 OR ASTM C 932. INTEGRALLY MIXED (IN MORTAR SCRATCH COAT) CAN BE USED SUCH THAT MORTAR ACHIEVES MINIMUM SHEAR BOND STRENGTH OF 50 PSI WHEN TESTED IN ACCORDANCE WITH ASTM C482. AS AN ALTERNATIVE TO CONCRETE BONDING AGENT, CORROSION RESISTANT MINIMUM 2.5 LBS. PER SQUARE YARD EXPANDED METAL LATH THAT COMPLIES WITH ASTM C 847 AND APPLIED WITH APPROPRIATE CONCRETE FASTNERS MAY BE USED. USE CONCRETE FASTENING PINS WITH WASHERS APPLIED WITH A POWDER ACTUATED FASTENING TOOL. PINS SHALL HAVE A MINIMUM SHANK LENGTH OF 3/4 IN. WITH A 0.145 IN. HEAD DIAMETER AND UTILIZE A 16 GAGE WASHER.
- MORTAR SCRATCH COAT AND MORTAR JOINTS (IF APPLICABLE), PROPORTIONS BY VOLUME:
  - PORTLAND TYPE I/II CEMENT ASTM C-150 (1 PART), MASOMRY TYPE-N CEMENT ASTM C-270 1 PART), MASONRY SAND ASTM C-144 (3 PARTS), WATER ADDED TO ACHIEVE FIRM, MOIST CONSISTENCY, PIGMENT (POWDER OR LIQUID) ASTM C979 OPTIONAL, OR
  - MASONRY TYPE-S CEMENT ASTM C270 (1 PART), MASONRY SAND ASTM C-144 (3 PARTS), WATER ADDED TO ACHIEVE FIRM, MOIST CONSISTENCY, PIGMENT (POWDER OR LIQUID) ASTM C979 OPTIONAL

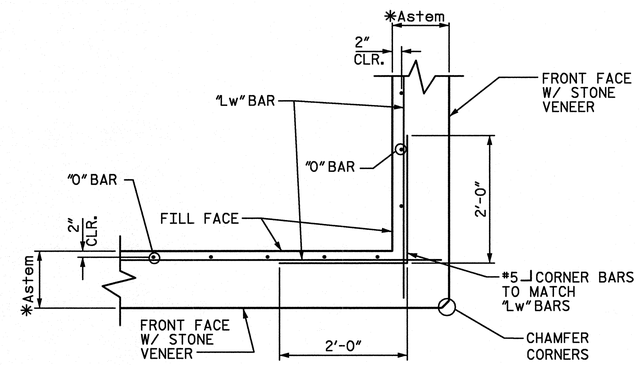

WALL CORNER DETAIL PLAN @ -L- STA. 14+18.97 & 14+55.29

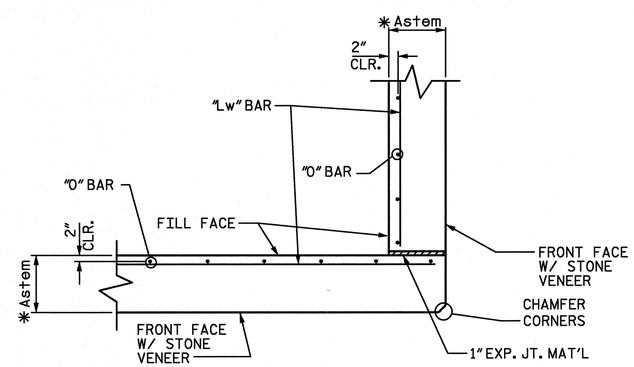

OPTIONAL-WALL CORNER DETAIL PLAN @ -L- STA. 14+18.97 & 14+55.29

REVISIONS

NO.	DATE	DESCRIPTION	BY

559 Jones Franklin Rd. Suite 164
Raleigh, N.C. 27606
Bus: 919 851 8077
Fax: 919 851 8107
License No.: F-0377
ETHERILL ENGINEERING
TRANSPORTATION PLANNING/DESIGN - BRIDGE/STRUCTURE DESIGN
CIVIL/SITE DESIGN - GIS/GPS - CONSTRUCTION OBSERVATION

Wall NO. 7 Details
Sta. 14+18.29 -L- to Sta. 14+54.91-L-

Wait Ave
Town of Wake Forest
North Carolina

DATE: 12 - 2011
SCALE: NTS
DRAWN BY: GFW
CHECKED BY: JAD
SHEET: W7 3 OF 3
PROJ. NO.:

3/15/2012
9:26:50 AM
P:\2011\11360.06 Wait Ave Wake Forest\DGN\Wall DETAILS 7.dgn

CONTRACTOR IS RESPONSIBLE FOR LOCATING UTILITIES PRIOR TO CONSTRUCTION. IF THERE ARE ANY DEVIANCE FROM THE PLANS THE ENGINEER SHALL BE CONTACTED.

THE CONTRACTOR SHALL MAKE FIELD ADJUSTMENTS AS NECESSARY FOR HEIGHT AND LAYOUT OF WALL AS TO BEST FIT EXISTING FIELD CONDITIONS.

ALL CONSTRUCTION SHALL BE IN ACCORDANCE WITH TOWN OF WAKE FOREST STANDARDS AND SPECIFICATIONS.

SURVEY BY WK DICKSON & ASSOCIATES. ENGINEERS NOT RESPONSIBLE FOR THE ACCURACY OF THE SURVEY. THE CONTRACTOR SHALL FIELD VARIFY THE LOCATION OF ANY EXISTING CONSTRUCTION CONFLICTS AND NOTIFY ENGINEER OF ANY DEVIATION FROM THIS SURVEY.

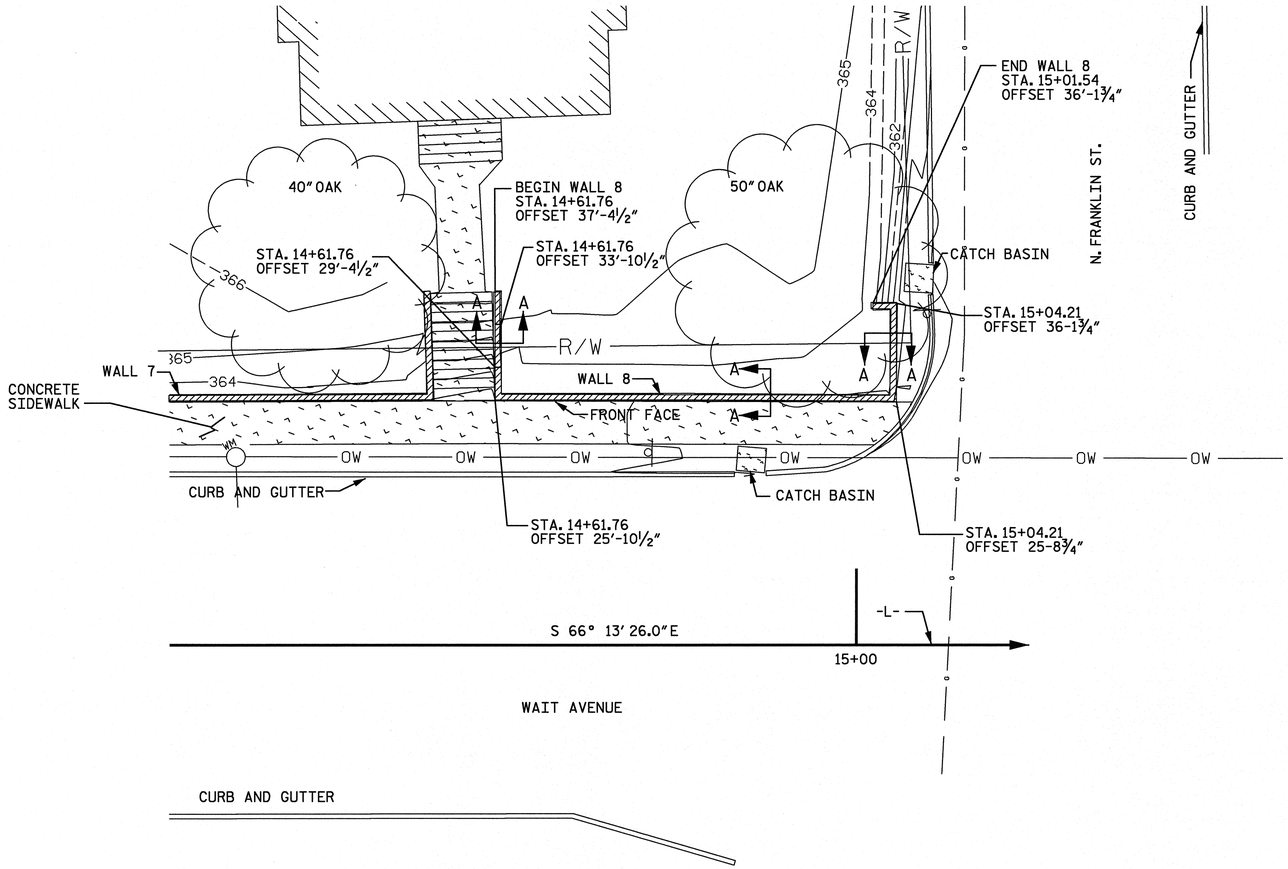

PLAN

TOW = TOP OF WALL ELEVATION
BOW = BOTTOM OF WALL ELEVATION = TOP OF FOOTING
TOSW = TOP OF SIDEWALK ELEVATION

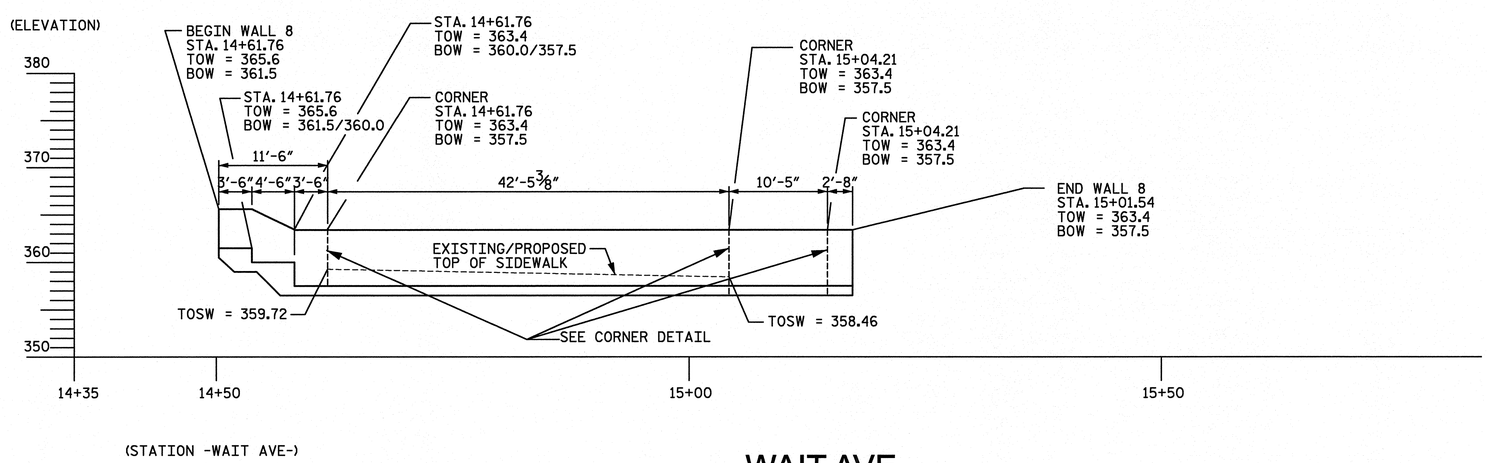

-WAIT AVE-

CANTILEVERED CONCRETE RETAINING WALL NO. 8 ELEVATION - FRONT FACE

REVISIONS

NO.	DATE	DESCRIPTION	BY

WETHERILL ENGINEERING
559 Jones Franklin Rd. Suite 164
Raleigh, N.C. 27606
Bus: 919 851 8077
Fax: 919 851 8107
License No.: F-0377

TRANSPORTATION PLANNING/DESIGN - BRIDGE/STRUCTURE DESIGN
CIVIL/SITE DESIGN - GIS/GPS - CONSTRUCTION OBSERVATION

WALL NO. 8 LAYOUT
Sta. 14+61.76 -L- to Sta. 15+01.54 -L-

Wait Ave
Town of Wake Forest
North Carolina

DATE: 12 - 2011
SCALE: NTS
DRAWN BY: GFW
CHECKED BY: JAD
SHEET: WB 1 OF 3
PROJ. NO.:

2/15/2012
9:28:37 AM
P:\2011\11360.06 Wait Ave Wake Forest\DGN\Wall 8.dgn

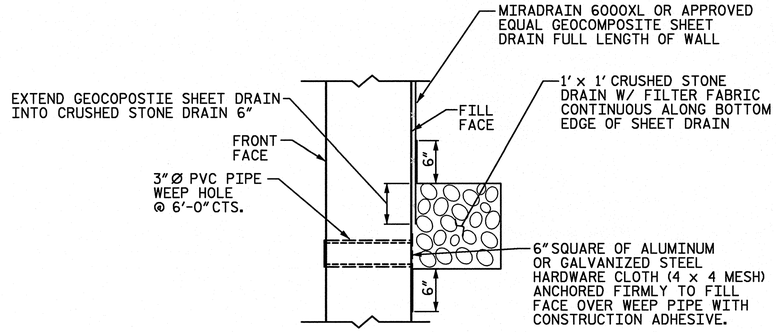

WALL DRAIN DETAIL

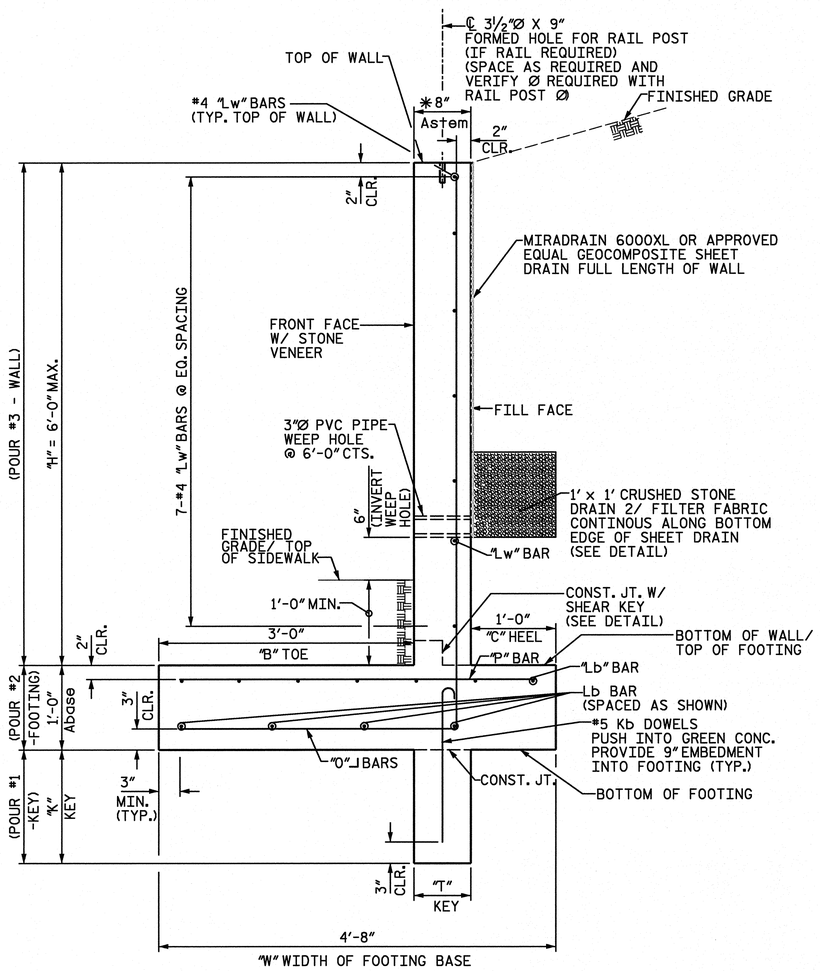

SECTION A-A

CANTILEVERED CONCRETE RETAINING WALL
STATION 14+61.76 -L- TO STATION 15+01.71 -L-

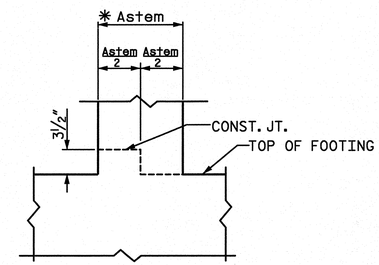

SHEAR KEY DETAIL

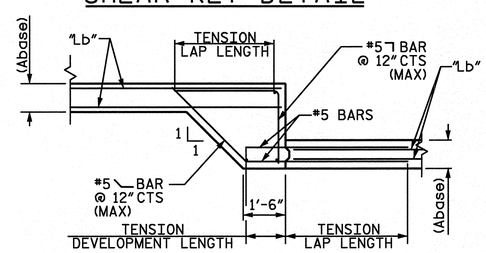

FOOTING STEP DETAIL

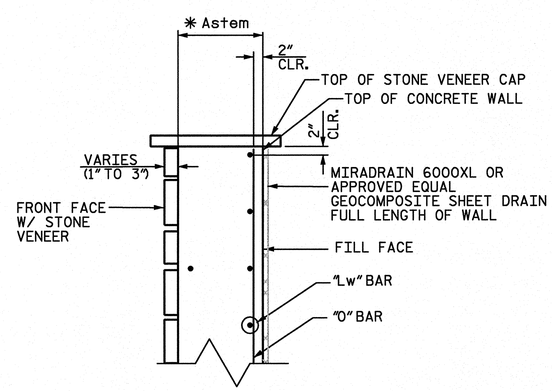

STONE VENEER FRONT FACE

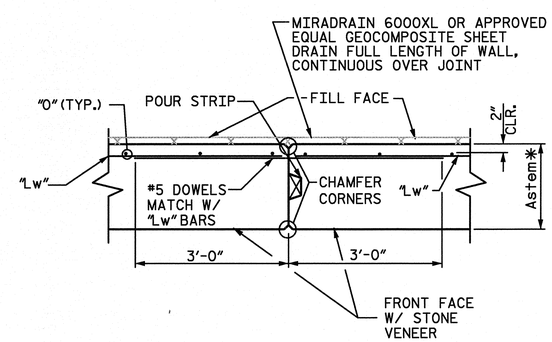

VERTICAL CONSTRUCTION JOINT WALL PLAN VIEW

GENERAL ENGINEERING NOTES

1. ALL APPLIED LOADS AND LOAD COMBINATIONS ARE IN ACCORDANCE WITH THE NORTH CAROLINA BUILDING CODE 2006 EDITION AND 17TH EDITION OF AASHTO STANDARD SPECIFICATIONS FOR HIGHWAY BRIDGES.
2. CONTRACTOR SHALL HAVE A GEOTECHNICAL ENGINEER FIELD VERIFY THE BEARING CAPACITY OF THE SOIL FOR THE WALL FOOTINGS. SOILS SHALL BE SUITABLE FOR PROVIDING THE REQUIRED BEARING CAPACITY OF 2,000 PSF WITH A MINIMUM FACTOR OF SAFETY OF 3.
3. DESIGN PARAMETERS:
   SOIL WEIGHT = 120 PCF
   EQUIVALENT FLUID PRESSURE = 45 PCF
   Ka = 0.375
   COEFFICIENT OF FRICTION = 0.32
   ALLOWABLE BEARING CAPACITY = 2,000 PSF
4. SITE PREPARATION AND SOIL CONDITIONING DURING CONSTRUCTION ARE THE RESPONSIBILITY OF THE CONTRACTOR.
5. THE MINIMUM 28 DAY COMPRESSION STRENGTH OF CONCRETE SHALL BE 3,000 PSI.
6. ALL REINFORCING STEEL SHALL BE ASTM A615, GRADE 60 DEFORMED BARS. FY=60 KSI. ALL REINFORCING SHALL BE PLACED IN ACCORDANCE WITH LATEST EDITION OF ACI318 AND ACI315. MINIMUM SPLICE LENGTHS SHALL BE 40 BAR DIAMETERS.
7. ALL CONTRACTION JOINTS (CONTROL JOINTS) SHALL BE NO GREATER THAN 25' APART. JOINT DEPTH SHALL BE 1" DEEP BY ¼" WIDE ON BOTH FACES.
8. CONTRACTOR SHALL CONSTRUCT THE WALL AS SHOWN IN THESE PLANS. ANY AND ALL MODIFICATIONS SHALL BE APPROVED BY THE ENGINEER IN WRITING PRIOR TO CONSTRUCTION.
9. CONTRACTOR SHALL BE RESPONSIBLE FOR COMPILING WITH ALL LOCAL, STATE AND FEDERAL REGULATIONS.
10. CONTRACTOR SHALL THOUROUGHLY REVIEW PLANS AND SPECIFICATIONS PRIOR TO CONSTRUCTION. REQUEST FOR ADDITIONAL INFORMATION AND CLARIFICATIONS SHALL BE MADE TO THE ENGINEER IN WRITING.
11. PVC PIPE SHALL BE SCHEDULE 40 AND SHALL CONFORM TO THE REQUIREMENTS OF THE ASTM D-1785.
12. GEOCOMPOSITE SHEET DRAIN SHALL BE MIRADRAIN 6000XL OR APPROVED EQUAL. GEOCOMPOSITE SHEET DRAIN SHALL BE INSTALLED IN ACCORDANCE WITH MANUFACTURER'S REQUIREMENTS.
13. UNLESS OTHERWISE NOTED ON THE PLANS, ALL EXPOSED CORNERS ON STRUCTURES SHALL BE CHAMFERED ¾".
14. EXISTING SIDEWALK IS TO BE REMOVED. PROPOSED SIDEWALK SHALL BE PLACED AT THE ELEVATION AND LOCATION OF THE PREVIOUS SIDEWALK.
15. A 42" TALL GUARDRAIL SHALL BE REQUIRED AT ALL LOCATIONS WHERE THE RETAINING WALL HEIGHT IS 30" OR GREATER ABOVE FINISHED GRADE.

* STEM THICKNESS (Astem) IS THICKNESS OF CONCRETE WALL ONLY. Astem DOES NOT INCLUDE THICKNESS OF STONE VENEER ON WALL FRONT FACE.

NORTH CAROLINA PROFESSIONAL SEAL 22072 ENGINEER JOHN ARTHUR BARNES
2-15-12

REVISIONS

NO.	DATE	DESCRIPTION	BY

WETHERILL ENGINEERING
559 Jones Franklin Rd. Suite 164
Raleigh, N.C. 27606
Bus: 919 851 8077
Fax: 919 851 8107
License No.: F-0377

TRANSPORTATION PLANNING/DESIGN - BRIDGE/STRUCTURE DESIGN
CIVIL/SITE DESIGN - GIS/GPS - CONSTRUCTION OBSERVATION

Wall NO. 8 Details
Sta. 14+61.76 -L- to Sta. 15+01.54 -L-

Wait Ave
Town of Wake Forest
North Carolina

DATE: 12 - 2011
SCALE: NTS
DRAWN BY: GFW
CHECKED BY: JAD
SHEET: WB 2 OF 3
PROJ. NO.:

3/15/2012
8:29:06 AM
P:\2011\11360.06 Wait Ave Wake Forest\DGN\Wall DETAILS 8.dgn

CANTILEVERED CONCRETE RETAINING WALL NO. 8

STATION TO STATION -L-	CONCRETE DIMENSIONS & VOLUMES: OFFSET FROM -L-	WALL SECTION LENGTH	MAX. WALL HEIGHT ABOVE TOP OF FOOTING BASE (H)	✱ STEM THICKNESS (Astem)	TOE (B)	HEEL (C)	WIDTH OF BASE (W)	HEIGHT OF FOOTING (Abase)	KEY (T MIN. x K)	CONCRETE QUANTITY	ELEVATIONS: TOP OF WALL EL.	BOTTOM OF WALL /TOP OF FOOTING EL.	BOTTOM OF FOOTING EL.	STEM REINFORCEMENT: "O" BARS SIZE @ IN.	"Lw" BARS *BARS -SIZE	FOOTING REINFORCEMENT: "P" BARS SIZE @ IN.	"Lb" BARS *BARS -SIZE	"Kb" BARS SIZE @ IN.
14+61.76 TO 14+61.76	37'-4½"LT.	3'-6"	4.10'	8"	3'-0"	1'-0"	4'-8"	12"	———	1.0 CY	365.6	361.5	360.5	#5 @ 8"	7 - #4	#5 @ 8"	11 - #4	#5 @ 1'-4"
14+61.76 TO 14+61.76	33'-10½"LT.	4'-6"	5.60' TO 3.40'	8"	3'-0"	1'-0"	4'-8"	12"	———	1.3 CY	356.6 TO 363.4	360.0	359.0	#5 @ 8"	7 - #4	#5 @ 8"	11 - #4	#5 @ 1'-4"
14+61.76 TO 14+61.76	29'-4½"LT.	3'-6"	5.90'	8"	3'-0"	1'-0"	4'-8"	12"	———	1.1 CY	363.4	357.5	356.5	#5 @ 8"	7 - #4	#5 @ 8"	11 - #4	#5 @ 1'-4"
14+61.76 TO 15+04.21	25'-10½"LT.	42'-5⅜"	5.90'	8"	3'-0"	1'-0"	4'-8"	12"	8" x 1'-4"	13.6 CY	363.4	357.5	356.5	#5 @ 8"	7 - #4	#5 @ 8"	11 - #4	#5 @ 1'-4"
15+04.21 TO 15+04.21	25'-8¾"LT.	10'-5 "	5.90'	8"	3'-0"	1'-0"	4'-8"	12"	8" x 1'-4"	3.4 CY	363.4	357.5	356.5	#5 @ 8"	7 - #4	#5 @ 8"	11 - #4	#5 @ 1'-4"
15+04.21 TO 15+01.54	36'-1¾"LT. TO 36'-1¾"LT.	2'-8"	5.90'	8"	3'-0"	1'-0"	4'-8"	12"	8" x 1'-4"	0.9 CY	363.4	357.5	356.5	#5 @ 8"	7 - #4	#5 @ 8"	11 - #4	#5 @ 1'-4"

✱ STEM THICKNESS (Astem) IS THICKNESS OF CONCRETE WALL ONLY. Astem DOES NOT INCLUDE THICKNESS OF STONE VENEER ON WALL FRONT FACE.

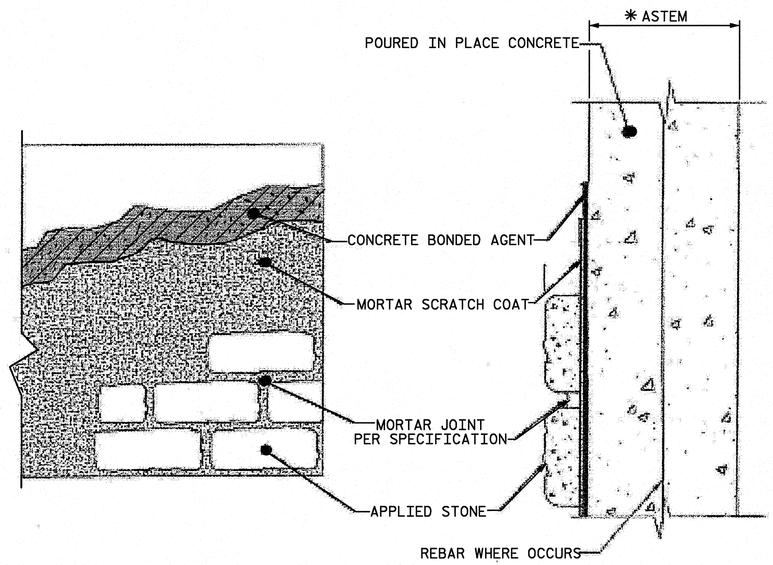

STONE VENEER INSTALLATION OVER POURED CONCRETE SURFACES

SPECIFICATIONS:

- CONCRETE BONDING AGENT: SURFACE APPLIED BONDING AGENTS THAT MEET ASTM C 1059 OR ASTM C 932. INTEGRALLY MIXED (IN MORTAR SCRATCH COAT) CAN BE USED SUCH THAT MORTAR ACHIEVES MINIMUM SHEAR BOND STRENGTH OF 50 PSI WHEN TESTED IN ACCORDANCE WITH ASTM C482. AS AN ALTERNATIVE TO CONCRETE BONDING AGENT, CORROSION RESISTANT MINIMUM 2.5 LBS. PER SQUARE YARD EXPANDED METAL LATH THAT COMPLIES WITH ASTM C 847 AND APPLIED WITH APPROPRIATE CONCRETE FASTNERS MAY BE USED. USE CONCRETE FASTENING PINS WITH WASHERS APPLIED WITH A POWDER ACTUATED FASTENING TOOL. PINS SHALL HAVE A MINIMUM SHANK LENGTH OF ¾IN. WITH A 0.145 IN. HEAD DIAMETER AND UTILIZE A 16 GAGE WASHER.
- MORTAR SCRATCH COAT AND MORTAR JOINTS (IF APPLICABLE), PROPORTIONS BY VOLUME:
  - PORTLAND TYPE I/II CEMENT ASTM C-150 (1 PART), MASOMRY TYPE-N CEMENT ASTM C-270 1 PART), MASONRY SAND ASTM C-144 (3 PARTS), WATER ADDED TO ACHIEVE FIRM, MOIST CONSISTENCY, PIGMENT (POWDER OR LIQUID) ASTM C979 OPTIONAL, OR
  - MASONRY TYPE-S CEMENT ASTM C270 (1 PART), MASONRY SAND ASTM C-144 (3 PARTS), WATER ADDED TO ACHIEVE FIRM, MOIST CONSISTENCY, PIGMENT (POWDER OR LIQUID) ASTM C979 OPTIONAL

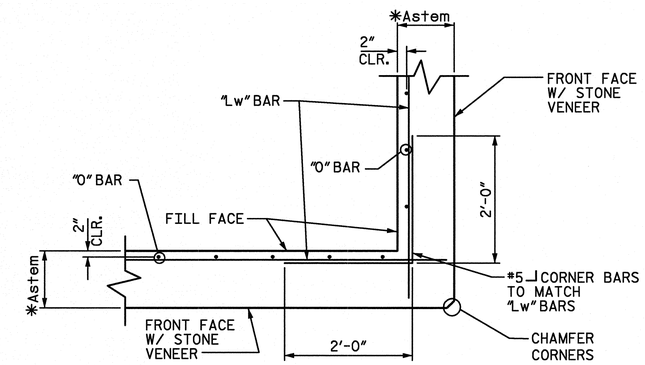

WALL CORNER DETAIL PLAN @ -L- STA. 14+61.76 & 15+04.21

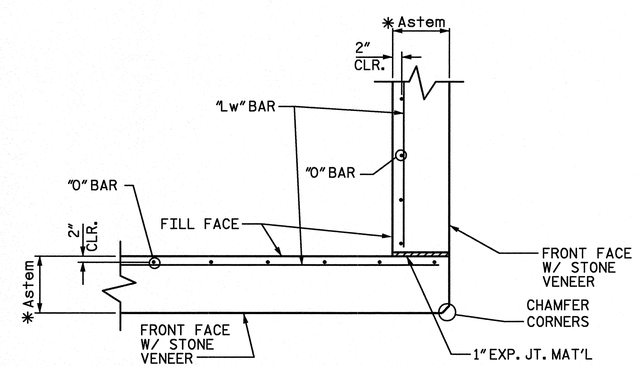

OPTIONAL-WALL CORNER DETAIL PLAN @ -L- STA. 14+61.76 & 15+04.21

REVISIONS

NO.	DATE	DESCRIPTION	BY

WETHERILL ENGINEERING
559 Jones Franklin Rd. Suite 164
Raleigh, N.C. 27606
Bus: 919 851 8077
Fax: 919 851 8107
License No.: F-0377

TRANSPORTATION PLANNING/DESIGN - BRIDGE/STRUCTURE DESIGN
CIVIL/SITE DESIGN - GIS/GPS - CONSTRUCTION OBSERVATION

Wall NO. 8 Details
Sta. 14+61.76 -L- to Sta. 15+01.54-L-

Wait Ave
Town of Wake Forest
North Carolina

DATE: 12 - 2011
SCALE: NTS
DRAWN BY: GFW
CHECKED BY: JAD
SHEET: WB 3 OF 3
PROJ. NO.:

2/15/2012
8:23:07 AM
P:\2011\11360.06 Wait Ave Wake Forest\DGN\Wall DETAILS 8.dgn