SMITH CREEK GREENWAY AT LIGON MILL ROAD, PARKING & TRAILHEAD
BURLINGTON MILLS ROAD LANDSCAPE RESTORATION

CLIENT: TOWN OF WAKE FOREST
MINOR SITE PLAN SUBMITTAL

TOWN *of* WAKE FOREST

Planning Department
Wake Forest Town Hall – 3rd Floor
301 S. Brooks Street
Wake Forest, NC 27587
t 919.435.9510
f 919.435.9539
www.wakeforestnc.gov

PLAN REVIEW APPLICATION
(Last updated: July 2013)

REVIEW PROCEDURE TYPE ***(See Section 15.2.4 of UDO for details):***
☐ Site Master Plan (Major) ☐ Site Master Plan (Minor) ☒ Site Construction Plan
☐ Subdivision Master Plan (Major) ☐ Subdivision Plan (Minor) ☐ Subdivision Construction Plan
☐ Final Plat ☐ Other: _____

PLAN/PROJECT INFORMATION:

Submittal Date: May 22, 2015

Land Use Type (General): ☐ Residential ☐ Lodging ☐ Office/Service ☐ Commercial/Entertainment ☐ Civic ☐ Agriculture ☐ Education/Institution ☐ Automotive ☐ Industry/Wholesale/Storage ☒ Infrastructure ☐ Other: _____

Proposed Land Use (Specific): Roadside Landscape Improvements

Project Name: Burlington Mills Road Landscape Restoration

Location: Burlington Mills Road at Bratt Avenue

Building(s) Size (square feet): NA **No. of lots/units:** _____

Tax PIN: NCDOT Right-of-way

Acreage: NA **Zoning:** NA

Town Jurisdiction: ☒ Inside Corporate Limits ☐ ETJ ☐ Outside Corporate Limits & ETJ

**See Chapter 3 of the Wake Forest UDO for applicable supplemental use standards*

APPLICANT INFORMATION:

Owner or Developer: Town of Wake Forest, Holly Miller, PE
Address: 301 S. Brooks ST **City:** Wake Forest
State: NC **Zip:** 27587 **Phone:** 919.435.9443
Fax: _____ **Email:** hmiller@wakeforestnc.gov

Plan Preparer: Kimley-Horn & Associates **Contact Person:** Brandon P. White, PLA
Address: 333 Fayetteville ST, Suite 600 **City:** Raleigh
State: NC **Zip:** 27601 **Phone:** 919.653.2928
Fax: _____ **Email:** brandon.white@kimley-horn.com

The submitted plan shall depict or contain the information on the appropriate checklist(s). The applicant must pay all fees prior to the final approval of a plan. These fees are listed in official Town of Wake Forest Comprehensive List of Fees & Charges. ****Town of Wake Forest fees and charges are subject to change without notice. Please call 919-435-9510 to confirm current fees and charges.***

For Department Use Only:
Submittal Date: _____
Received By: _____
Permit/Case No: _____

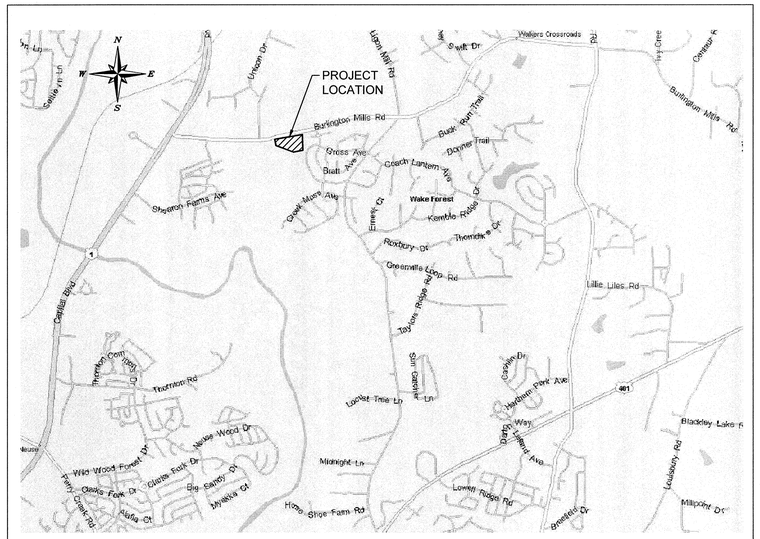

VICINITY MAP
SCALE = 1" = 2000'

SHEET LIST TABLE	
SHEET NUMBER	SHEET TITLE
C0.0	COVER SHEET BURLINGTON MILLS ROAD
C0.1	GENERAL NOTES BURLINGTON MILLS RD
C1.0	EXISTING CONDITIONS AND DEMOLITION PLAN BURLINGTON MILLS RD
C2.0	SITE PLAN BURLINGTON MILLS RD
C3.0	GRADING DRAINAGE & EROSION CONTROL PLAN BURLINGTON MILLS RD
C3.1	SITE DETAILS BURLINGTON MILLS RD
L1.0	LANDSCAPE PLAN BURLINGTON MILLS RD
L1.1	LANDSCAPE PLAN BURLINGTON MILLS RD
L2.0	LANDSCAPE AND HARDSCAPE DEATILS BURLINGTON MILLS RD

CONTACTS

CLIENT: TOWN OF WAKE FOREST
301 SOUTH BROOKS STREET
WAKE FOREST, NC 27587-2901
ATTN: HOLLY MILLER, P.E.
PHONE: (919) 435-9443

CIVIL ENGINEER: KIMLEY-HORN AND ASSOCIATES, INC.
333 FAYETTEVILLE STREET
SUITE 600
RALEIGH, NC 27601
PHONE: (919) 653-2990
ATTN: JOHN KUZENSKI, P.E.

LANDSCAPE ARCHITECT: KIMLEY-HORN AND ASSOCIATES, INC.
333 FAYETTEVILLE STREET
SUITE 600
RALEIGH, NC 27601
PHONE: (919) 653-2928
ATTN: BRANDON WHITE, PLA, ASLA

SURVEYOR: BBM & ASSOCIATES
1011 SCHAUB DRIVE, SUITE 102
RALEIGH, NC 27606
PHONE: (919) 833-7336

THESE PLANS HAVE BEEN APPROVED FOR CONSTRUCTION BY THE TOWN OF WAKE FOREST.

Holly E. Miller — ENGINEERING DEPARTMENT	DATE 7-2-15
— PUBLIC WORKS DEPARTMENT	DATE
Holly E. Miller — EROSION & SEDIMENT CONTROL	DATE 7-2-15
— FIRE PREVENTION	DATE
Candace R. Davis — ACCESSIBILITY	DATE 7/14/15
Jennifer O'Rall — PLANNING DEPARTMENT	DATE 7/7/15
URBAN FORESTER	DATE
CITY OF RALEIGH PUBLIC UTILITIES DEPARTMENT	DATE

ALL PUBLIC FACILITIES, INCLUDING UTILITIES, SIDEWALKS, AND HANDICAP RAMPS ARE TO BE CONSTRUCTED ON ALL STREETS AS SPECIFIED BY TOWN STANDARDS. THESE FACILITIES HAVE BEEN APPROVED BY THE TOWN OF WAKE FOREST AND SHALL BE SO INSTALLED UNLESS A CHANGE IS APPROVED BY THE TOWN OF WAKE FOREST.

EXECUTION OF THIS CONSTRUCTION PLAT BY THE REVIEW ENGINEER FOR THE TOWN OF WAKE FOREST IN NO WAY LIMITS THE RESPONSIBILITY OF THE OWNER AND ENGINEER OF RECORD WITH REGARD TO COMPLIANCE WITH ALL FEDERAL, STATE, AND LOCAL STANDARDS AND/OR CONDITIONS.

OWNER HEREBY CERTIFIES AND AGREES TO TAKE SUCH ACTION AS MAY BE REQUIRED BY THE TOWN OF WAKE FOREST TO CORRECT ANY ERRORS, OMISSIONS OR NON-COMPLIANCE WITH TOWN STANDARDS AND/OR CONDITIONS DESCRIBED IN THIS CONSTRUCTION PLAT, INCLUDING RE-SUBMISSION OR RE-EXECUTION OF THIS CONSTRUCTION PLAT WITH THE APPROPRIATE CORRECTIONS AND/OR REVISIONS.

811 Know what's **below.** **Call** before you dig.

No.	REVISIONS	DATE	BY

Kimley»Horn

© 2015 KIMLEY-HORN AND ASSOCIATES, INC.

333 FAYETTEVILLE STREET, SUITE 600, RALEIGH, NC 27601
PHONE: 919-835-1494
WWW.KIMLEY-HORN.COM
NC LICENSE # F-0102

KHA PROJECT 011311036
DATE 6/24/15
SCALE AS SHOWN
DESIGNED BY BPW
DRAWN BY BNR
CHECKED BY BPW

LIGON MILL TRAILHEAD
PREPARED FOR
TOWN OF WAKE FOREST
WAKE FOREST NC

NORTH CAROLINA PROFESSIONAL SEAL 1625 REGISTERED LANDSCAPE ARCHITECT BRANDON PHILLIP WHITE
06.24.2015

COVER SHEET
BURLINGTON MILLS ROAD

SHEET NUMBER
C0.0

Plotted By:Roy, Bethany Sheet Set:Ligon Mill Trailhead Layout:C0.0 COVER SHEET BURLINGTON MILLS ROAD June 24, 2015 03:52:57pm K:\RDT_LDEV\011311036 town-ligon mill trailhead\planning phase\plS cad files\PlanSheets\C0.0 COVER SHEET.dwg
This document, together with the concepts and designs presented herein, as an instrument of service, is intended only for the specific purpose and client for which it was prepared. Reuse of and improper reliance on this document without written authorization and adaptation by Kimley-Horn and Associates, Inc. shall be without liability to Kimley-Horn and Associates, Inc.

Plotted By: Ray, Bethany Sheet Set: Ligon Mill Trailhead Layout: C0.1 GENERAL NOTES BURLINGTON MILLS RD June 24, 2015 03:53:09pm K:\RDT_LDEV\011311036_towf-ligon_mill_trailhead\planning phase\p15_cad files\PlanSheets\C0.1 GENERAL NOTES BURLINGTON MILLS RD.dwg
This document, together with the concepts and designs presented herein, as an instrument of service, is intended only for the specific purpose and client for which it was prepared. Reuse of and improper reliance on this document without written authorization and adaptation by Kimley-Horn and Associates, Inc. shall be without liability to Kimley-Horn and Associates, Inc.

GENERAL NOTES:

1. THE CONTRACTOR SHALL EMPLOY ALL NECESSARY BARRICADES, SIGNS, FENCES, FLASHING LIGHTS, TRAFFIC MEN, ETC. FOR MAINTENANCE AND PROTECTION OF TRAFFIC AS REQUIRED BY THE NORTH CAROLINA DEPT. OF TRANSPORTATION (NCDOT) AND TOWN OF WAKE FOREST.
2. THE CONTRACTOR SHALL PROTECT ALL MONUMENTS, IRON PINS, AND PROPERTY CORNERS DURING CONSTRUCTION.
3. THE CONTRACTOR SHALL REPLACE EXISTING CONCRETE CURBS, SIDEWALK, PAVING, AND GUTTER AS NECESSARY.
4. APPROVAL OF THIS PLAN IS NOT AN AUTHORIZATION TO GRADE ADJACENT PROPERTIES. WHEN FIELD CONDITIONS WARRANT OFF-SITE GRADING, PERMISSION MUST BE OBTAINED FROM THE AFFECTED PROPERTY OWNERS.
5. CONTRACTOR AGREES TO REPAIR ANY DAMAGE TO THE PUBLIC RIGHT-OF-WAY IN ACCORDANCE WITH THE STANDARDS OF THE NCDOT AND TOWN OF WAKE FOREST.
6. COORDINATE ALL CURB AND STREET GRADES IN INTERSECTIONS WITH INSPECTOR.
7. THE CONTRACTOR SHALL IMMEDIATELY REPORT TO THE OWNER ANY DISCREPANCIES FOUND BETWEEN THE ACTUAL FIELD CONDITIONS AND THE CONSTRUCTION DOCUMENTS AND SHALL WAIT FOR INSTRUCTION PRIOR TO PROCEEDING.

TREE PROTECTION NOTES:

1. NO SOIL DISTURBANCE OR COMPACTION, CONSTRUCTION MATERIALS, TRAFFIC, BURIAL PITS, TRENCHING OR OTHER LAND DISTURBING ACTIVITY ALLOWED IN THE TREE PROTECTION AREA. TREE FENCING MUST BE INSTALLED BEFORE ANY DEMOLITION, GRADING OR CONSTRUCTION BEGINS, AND NOT REMOVED UNTIL FINAL INSPECTION.
2. THE CONTRACTOR SHALL PROTECT ALL TREES AND SHRUBS OUTSIDE OF CUT/FILL LINES, IN ADDITION TO THOSE THAT RECEIVE TREE/SHRUB PROTECTION BARRIERS. THE CONTRACTOR IS ALSO REQUIRED TO SAVE ALL OTHER EXISTING TREES AND SHRUBS WHERE POSSIBLE.
3. WHEN ROOT PRUNING IS NECESSARY, CUT ROOTS CLEANLY USING A DISC TRENCHER. ROOTS ARE TO BE CUT CLEARLY WITH NO RAGGED EDGES. USE PLYWOOD FORMS WHEN TREE ROOTS ARE ADJACENT TO PROPOSED CURB AND GUTTER OR SIDEWALK.
4. NO GRUBBING WITHIN TREE PROTECTION ZONE. LEAVE SOIL AND LEAF LITTER UNDISTURBED. SUPPLEMENT WITH 1-2 INCHES OF MULCH. RE-SEED WITH GRASS ONLY IN DISTURBED/GRADED AREAS.
5. TREE BARRICADES MUST BE INSTALLED BEFORE ANY DEMOLITION, CLEARING, GRADING OR CONSTRUCTION BEGINS AND IS NOT TO BE REMOVED UNTIL AFTER CONSTRUCTION.

DEMOLITION NOTES

1. CONTRACTOR SHALL COORDINATE WITH THE TOWN OF WAKE FOREST TO OBTAIN ALL NECESSARY DEMOLITION PERMITS PRIOR TO THE START OF ANY DEMOLITION WORK.
2. SAW CUT AND REMOVE CONCRETE CURB TO LIMITS REQUIRED FOR NEW WORK.
3. REMOVE VEGETATION AND GRASS IN AREAS TO RECEIVE NEW ASPHALT AND CONCRETE PAVEMENTS.
4. SAW CUT AND REMOVE ASPHALT PAVEMENT TO LIMITS INDICATED ON PLAN.
5. DEMOLITION MATERIALS SHALL BE PROPERLY DISPOSED OF OFF SITE PER STATE REGULATIONS.
6. ALL PRIMARY UTILITIES DISCOVERED DURING DEMOLITION OPERATIONS THAT SERVE ACTIVITIES OTHER THAN THE PROJECT SITE SHALL BE PROPERLY PRESERVED AND PROTECTED.
7. THE CONTRACTOR SHALL IMMEDIATELY REPORT TO THE OWNER AND ENGINEER ANY UNFORESEEN OR ADVERSE CONDITIONS, INCLUDING UNCHARTED UTILITIES, DISCOVERED DURING DEMOLITION OPERATIONS.
8. SUBSURFACE FEATURES ARE SHOWN IN APPROXIMATE LOCATION. CONTRACTOR IS RESPONSIBLE FOR SUBSURFACE UTILITY EXPLORATION TO DETERMINE UTILITY LOCATIONS AND DEPTHS.

CONSTRUCTION NOTES:

1. THE CONTRACTOR SHALL CONDUCT THE WORK IN A SAFE MANNER AND WITH A MINIMUM AMOUNT OF INCONVENIENCE TO TRAFFIC.
2. THE CONTRACTOR SHALL BE RESPONSIBLE FOR ALL TRAFFIC CONTROL AND SHALL ADHERE TO THE PROVISIONS OF THE MUTCD (MOST CURRENT EDITION).
3. PRIOR TO CONSTRUCTION BEGINNING, ALL SIGNAGE AND TRAFFIC CONTROL SHALL BE IN PLACE.
4. THE CONTRACTOR SHALL CONTACT THE TOWN OF WAKE FOREST PUBLIC WORKS DEPARTMENT AT 919-435-9570 TO OBTAIN A LANE CLOSURE PERMIT AT LEAST 72 HOURS PRIOR TO LANE CLOSURES. PROVIDE EXACT LOCATION, CROSS STREET, DATES FOR LANE CLOSURE, CONTACT PERSON AND FAX NUMBER.
5. THE CONTRACTOR SHALL BE RESPONSIBLE FOR CONTACTING THE INSPECTIONS DEPARTMENT AT 919-435-9530 TO OBTAIN A STREET CUT PERMIT.
6. THE CONTRACTOR SHALL HAVE A COMPLETE SET OF CONTRACT DOCUMENTS AS WELL AS ALL APPROVALS AND EASEMENTS ON THE JOB SITE AT ALL TIMES.
7. THE CONTRACTOR SHALL REPAIR ALL DRIVEWAYS, DRIVEWAY PIPES, CURB AND GUTTER, SIDEWALKS AND STREET TO EXISTING CONDITION OR BETTER.

GRADING:

1. ALL WORK AND MATERIALS SHALL COMPLY WITH ALL TOWN OF WAKE FOREST AND NORTH CAROLINA DEPARTMENT OF TRANSPORTATION (NCDOT) REGULATIONS AND CODES AND O.S.H.A. STANDARDS.
2. ALL PROPOSED CONTOURS AND SPOT ELEVATIONS REFLECT FINISHED GRADES.
3. ALL ELEVATIONS ARE IN REFERENCE TO THE BENCHMARK, AND THIS MUST BE VERIFIED BY THE GENERAL CONTRACTOR PRIOR TO GROUND BREAKING.
4. THE CONTRACTOR SHALL IMMEDIATELY REPORT TO OWNER ANY DISCREPANCIES FOUND BETWEEN ACTUAL FIELD CONDITIONS AND CONSTRUCTION DOCUMENTS AND SHALL WAIT FOR INSTRUCTION PRIOR TO PROCEEDING.
5. THE CONTRACTOR SHALL BE RESPONSIBLE FOR LOCATING AND PROTECTING EXISTING UTILITIES, AND SHALL REPAIR ALL DAMAGE TO EXISTING UTILITIES THAT OCCUR DURING CONSTRUCTION.
6. CONTRACTOR SHALL BLEND NEW EARTHWORK SMOOTHLY TO TRANSITION BACK TO EXISTING GRADE.
7. ALL FILL TO BE COMPACTED PER THE RECOMMENDATIONS OF A GEOTECHNICAL ENGINEER.
8. LIMITS OF CLEARING SHOWN ON GRADING PLAN ARE BASED UPON THE APPROXIMATE CUT AND FILL SLOPE LIMITS, OR OTHER GRADING REQUIREMENTS.
9. THE PROPOSED CONTOURS SHOWN IN DRIVES AND PARKING LOTS AND SIDEWALKS ARE FINISHED ELEVATIONS INCLUDING GRAVEL. REFER TO PAVEMENT CROSS SECTION DATA TO ESTABLISH CORRECT SUBBASE OR AGGREGATE BASE COURSE ELEVATIONS TO BE COMPLETED UNDER THIS CONTRACT.
10. CONTRACTOR SHALL INSURE POSITIVE DRAINAGE SO THAT RUNOFF WILL DRAIN BY GRAVITY FLOW ACROSS NEW PAVEMENT AREAS TO NEW OR EXISTING DRAINAGE INLETS OR SHEET OVERLAND.
11. ANY GRADING BEYOND THE LIMITS OF CONSTRUCTION AS SHOWN ON THE GRADING PLAN IS SUBJECT TO A FINE.
12. THE CONTRACTOR SHALL ADHERE TO ALL TERMS & CONDITIONS AS OUTLINED IN THE GENERAL N.P.D.E.S. PERMIT FOR STORMWATER DISCHARGE ASSOCIATED WITH CONSTRUCTION ACTIVITIES.
13. ALL UNSURFACED AREAS DISTURBED BY GRADING OPERATION SHALL RECEIVE TOPSOIL AND SEEDING PER THE LANDSCAPE PLAN AND SPECIFICATIONS.
14. CONTRACTOR SHALL GRASS DISTURBED AREAS UNTIL A HEALTHY STAND OF GRASS IS OBTAINED.
15. CONSTRUCTION SHALL COMPLY WITH ALL APPLICABLE GOVERNING CODES AND BE CONSTRUCTED TO SAME.
16. THE CONTRACTOR IS RESPONSIBLE FOR THE DESIGN AND IMPLEMENTATION OF ALL SHEETING, SHORING, BRACING AND SPECIAL EXCAVATION MEASURES REQUIRED TO MEET OSHA, FEDERAL, STATE AND LOCAL REGULATIONS PURSUANT TO THE INSTALLATION OF THE WORK INDICATED ON THESE DRAWINGS. THE DESIGN ENGINEER ACCEPTS NO RESPONSIBILITY FOR THE DESIGN(S) TO INSTALL SAID ITEMS.
17. THE CONTRACTOR SHALL INCLUDE IN THE CONTRACT PRICE ANY DEWATERING NECESSARY TO CONSTRUCT THE PROJECT AS SHOWN ON THE PLANS.
18. ALL FILL MATERIALS, EXISTING BUILDING FOUNDATIONS, PAVEMENT AND UTILITY STRUCTURES, TOPSOIL AND ANY OTHER DELETERIOUS MATERIALS SHALL BE COMPLETELY REMOVED FROM WITHIN THE BEARING ZONE BELOW THE STRUCTURE.
19. ALL FOUNDATION AND UTILITY EXCAVATION SHALL BE INSPECTED BY A QUALIFIED GEOTECHNICAL REPRESENTATIVE TO DETERMINE WHETHER UNSUITABLE MATERIAL MUST BE REMOVED. ALL UNDESIRABLE MATTER SHALL BE REMOVED, BACKFILLED AND COMPACTED WITH SUITABLE MATERIAL AS REQUIRED BY THE GEOTECHNICAL REPRESENTATIVE AT CONTRACTOR'S EXPENSE.
20. GRADES, ELEVATIONS AND LOCATIONS SHOWN ARE APPROXIMATE. AS DIRECTED BY THE ENGINEER, THEY MAY BE ADJUSTED TO ACCOMMODATE UNFORESEEN CONDITIONS. STATIONS, OFFSETS AND ELEVATIONS REFER TO THE CENTER OF DROP INLETS, MANHOLES AND JUNCTION BOXES, AND THE MIDPOINT OF THE LIP FOR CATCH BASINS.
21. CONTRACTOR SHALL ADJUST AND/OR CUT EXISTING PAVEMENT AS NECESSARY TO ASSURE A SMOOTH FIT AND CONTINUOUS GRADE.
22. EXISTING AND PROPOSED GRADE CONTOUR INTERVALS SHOWN AT 1 FOOT.
23. CONTRACTOR IS RESPONSIBLE FOR DEMOLITION OF EXISTING STRUCTURES INCLUDING REMOVAL OF ANY EXISTING UTILITIES SERVING THE STRUCTURE. UTILITIES ARE TO BE REMOVED TO THE RIGHT-OF-WAY.
24. BEFORE ANY EARTHWORK IS DONE, THE CONTRACTOR SHALL STAKE OUT AND MARK THE LIMITS OF PAVEMENT AND OTHER ITEMS ESTABLISHED IN THE PLANS. THE CONTRACTOR SHALL PROVIDE ALL NECESSARY ENGINEERING AND SURVEYING FOR LINE AND GRADE CONTROL POINTS RELATED TO EARTHWORK.
25. ALL PAVEMENT SUB GRADES SHALL BE SCARIFIED TO A DEPTH OF 8 INCHES AND COMPACTED TO A MINIMUM DENSITY OF 98 PERCENT OF ASTM D-698 DENSITY AT OPTIMUM MOISTURE CONTENT UNLESS OTHERWISE SHOWN ON THE CONSTRUCTION PLANS OR AS DIRECTED BY THE GEOTECHNICAL ENGINEER. FILL SHALL BE PLACED AND COMPACTED IN MAXIMUM 8" LIFTS. IN AREAS WHERE ROCK IS ENCOUNTERED AT FINAL SUB GRADE ELEVATION, THE EXPOSED ROCK SHALL BE TOPPED WITH A LEVELING COURSE OF SANDY CLAY OR CLAYEY SAND (P.I. BETWEEN 4 AND 15) AS NEEDED TO PROVIDE A SMOOTH SURFACE FOR PAVING.
26. THE CONTRACTOR SHALL CLEAR AND GRUB THE SITE AND PLACE, COMPACT, AND MOISTURE CONDITION ALL FILL PER THE PROJECT GEOTECHNICAL ENGINEER'S SPECIFICATIONS. THE FILL MATERIAL TO BE USED SHALL BE APPROVED BY THE GEOTECHNICAL ENGINEER PRIOR TO PLACEMENT.
27. TESTING OF MATERIALS REQUIRED FOR THE CONSTRUCTION OF THE PAVING IMPROVEMENTS SHALL BE PERFORMED BY AN APPROVED AGENCY FOR TESTING MATERIALS. THE TESTING LABORATORY AND THE PAYMENT OF SUCH TESTING SERVICES SHALL BE MADE BY THE OWNER. IT SHALL BE THE CONTRACTOR'S RESPONSIBILITY TO SHOW BY STANDARD TESTING PROCEDURES THAT THE WORK CONSTRUCTED DOES MEET THE REQUIREMENTS OF THE SPECIFICATIONS.
28. THE LOCATIONS OF STORM SEWER STRUCTURES SHOWN ON THESE PLANS (AND PROVIDED IN ASSOCIATED CADD FILES) ARE APPROXIMATE. THE CONTRACTOR SHALL STAKE ALL CURB INLET STRUCTURES SUCH THAT INLET TOPS ALIGN HORIZONTALLY WITH PROPOSED FINISHED GRADE (PER DETAIL, IF PROVIDED). WHERE PROPOSED STORM SEWERS TIE TO EXISTING STRUCTURES, PIPES, ETC., THE CONTRACTOR SHALL FIELD ADJUST PROPOSED STORM SEWERS TO MATCH THE LOCATIONS OF THESE EXISTING FEATURES.

TRAFFIC CONTROL:

1. REFER TO MANUAL ON UNIFORM TRAFFIC CONTROL DEVICES (LATEST EDITION) FOR DETAILS OF STANDARD TRAFFIC CONTROL SIGNED AND STANDARDS.

TOWN OF WAKE FOREST EROSION PERMIT NOTES

1. A LAND DISTURBING (E&SC) PERMIT IS REQUIRED FOR PROJECTS OVER 0.50 ACRE. IF MULTIPLE LOTS WITH LAND DISTURBANCE OVER 0.50 ACRE TOTAL ARE IEITHER CONTIGUOUS OR NON-CONTIGUOUS IN THE SAME SUBDIVISION, BEING TAKEN DOWN BY THE SAME BUILDER/OWNER, A LAND DISTURBANCE PERMIT IS REQUIRED. THE COST OF THE PLAN REVIEW AND PERMIT IS $400/ACRE ROUNDED UP (1.1 ACRES=2 ACRES @ $400/ACRE=$800). THE FEE IS DUE AT TIME OF PLAN SUBMITTAL. DEVELOPER IS RESPONSIBLE FOR INFORMING THE BUILDER OF E&SC PERMIT REQUIREMENTS ON INDIVIDUAL LOTS. DISCLAIMER: TOWN OF WAKE FOREST FEES AND CHARGES ARE SUBJECT TO CHANGE WITHOUT NOTICE. PLEASE CALL 919-435-9443 TO CONFIRM CURRENT FEES AND CHARGES.
2. IF ADDITIONAL ACREAGE IS ADDED TO AN EXISTING PERMIT REVISED FORMS, PLANS, AND ANY ADDITIONAL FEES MUST BE SUBMITTED.
3. IF OWNERSHIP OF A PROPERTY HAS CHANGED A REVISED FRO MUST BE SUBMITTED.
4. IF A PROPERTY IS TAKEN OVER BY THE BANK, THE BANK SHALL CONTACT THE TOWN AND REPAIR ALL EROSION CONTROL MEASURES TO TOWN/NCDENR STANDARDS. THEY SHALL ALSO SUBMIT A NEW FRO FORM.
5. IF A PROJECT IS NOT COMPLETE WITHIN TWO YEARS, THE PLANS MUST BE RENEWED AT $250/ACRE. A REVISED SET OF PLANS MAY BE SUBMITTED IF ACREAGE HAS ALREADY BEEN DEVELOPED AND A CERTIFICATE OF OCCUPANCY HAS BEEN ISSUED.
6. AN EROSION PRECONSTRUCTION MEETING MUST BE HELD WITH THE TOWN OF WAKE FOREST PRIOR TO THE START OF ANY WORK, INCLUDING INSTALLATION OF EROSION CONTROL MEASURES, DEMOLITION, CUTTING TREES, AND GRUBBING. CALL ENGINEERING AT (919) 435-9443 TO SET UP A MEETING. ALL PLANS MUST BE SIGNED AND COPIES RETURNED BACK TO THE TOWN 1 WEEK PRIOR TO PRECONSTRUCTION MEETING.
7. THE OWNER, GENERAL CONTRACTOR, GRADING COMPANY, AND EROSION CONTROL INSTALLER MUST BE PRESENT AT THE PRECONSTRUCTION MEETING.
8. THE E&SC PERMIT AND NPDES GENERAL STORMWATER PERMIT WILL BE GIVEN OUT AT THIS MEETING.

THESE PLANS HAVE BEEN APPROVED FOR CONSTRUCTION BY THE TOWN OF WAKE FOREST.

Signature	Department	Date
Holley E. Miller	ENGINEERING DEPARTMENT	7-2-15
—	PUBLIC WORKS DEPARTMENT	
Holley E. Miller	EROSION & SEDIMENT CONTROL	7-2-15
—	FIRE PREVENTION	
—	ACCESSIBILITY	
Candace R. Davis	PLANNING DEPARTMENT	7/14/15
Jennifer DRall	URBAN FORESTER	7/7/15
	CITY OF RALEIGH PUBLIC UTILITIES DEPARTMENT	

ALL PUBLIC FACILITIES, INCLUDING UTILITIES, SIDEWALKS, AND HANDICAP RAMPS ARE TO BE CONSTRUCTED ON ALL STREETS AS SPECIFIED BY TOWN STANDARDS. THESE FACILITIES HAVE BEEN APPROVED BY THE TOWN OF WAKE FOREST AND SHALL BE SO INSTALLED UNLESS A CHANGE IS APPROVED BY THE TOWN OF WAKE FOREST.

EXECUTION OF THIS CONSTRUCTION PLAT BY THE REVIEW ENGINEER FOR THE TOWN OF WAKE FOREST IN NO WAY LIMITS THE RESPONSIBILITY OF THE OWNER AND ENGINEER OF RECORD WITH REGARD TO COMPLIANCE WITH ALL FEDERAL, STATE, AND LOCAL STANDARDS AND/OR CONDITIONS.

OWNER HEREBY CERTIFIES AND AGREES TO TAKE SUCH ACTION AS MAY BE REQUIRED BY THE TOWN OF WAKE FOREST TO CORRECT ANY ERRORS, OMISSIONS OR NON-COMPLIANCE WITH TOWN STANDARDS AND/OR CONDITIONS DESCRIBED IN THIS CONSTRUCTION PLAT, INCLUDING RE-SUBMISSION OR RE-EXECUTION OF THIS CONSTRUCTION PLAT WITH THE APPROPRIATE CORRECTIONS AND/OR REVISIONS.

No.	REVISIONS	DATE	BY

Kimley»Horn

© 2015 KIMLEY-HORN AND ASSOCIATES, INC.
333 FAYETTEVILLE STREET, SUITE 600, RALEIGH, NC 27601
PHONE: 919-835-1494
WWW.KIMLEY-HORN.COM
NC LICENSE # F-0102

KHA PROJECT 011311036
DATE 6/24/15
SCALE AS SHOWN
DESIGNED BY BPW
DRAWN BY BNR
CHECKED BY BPW

LIGON MILL TRAILHEAD
PREPARED FOR
TOWN OF WAKE FOREST

WAKE FOREST NC

NORTH CAROLINA PROFESSIONAL ENGINEER SEAL 033841 JOHN D. KUZENSKI 6/24/15

GENERAL NOTES BURLINGTON MILLS RD

SHEET NUMBER C0.1

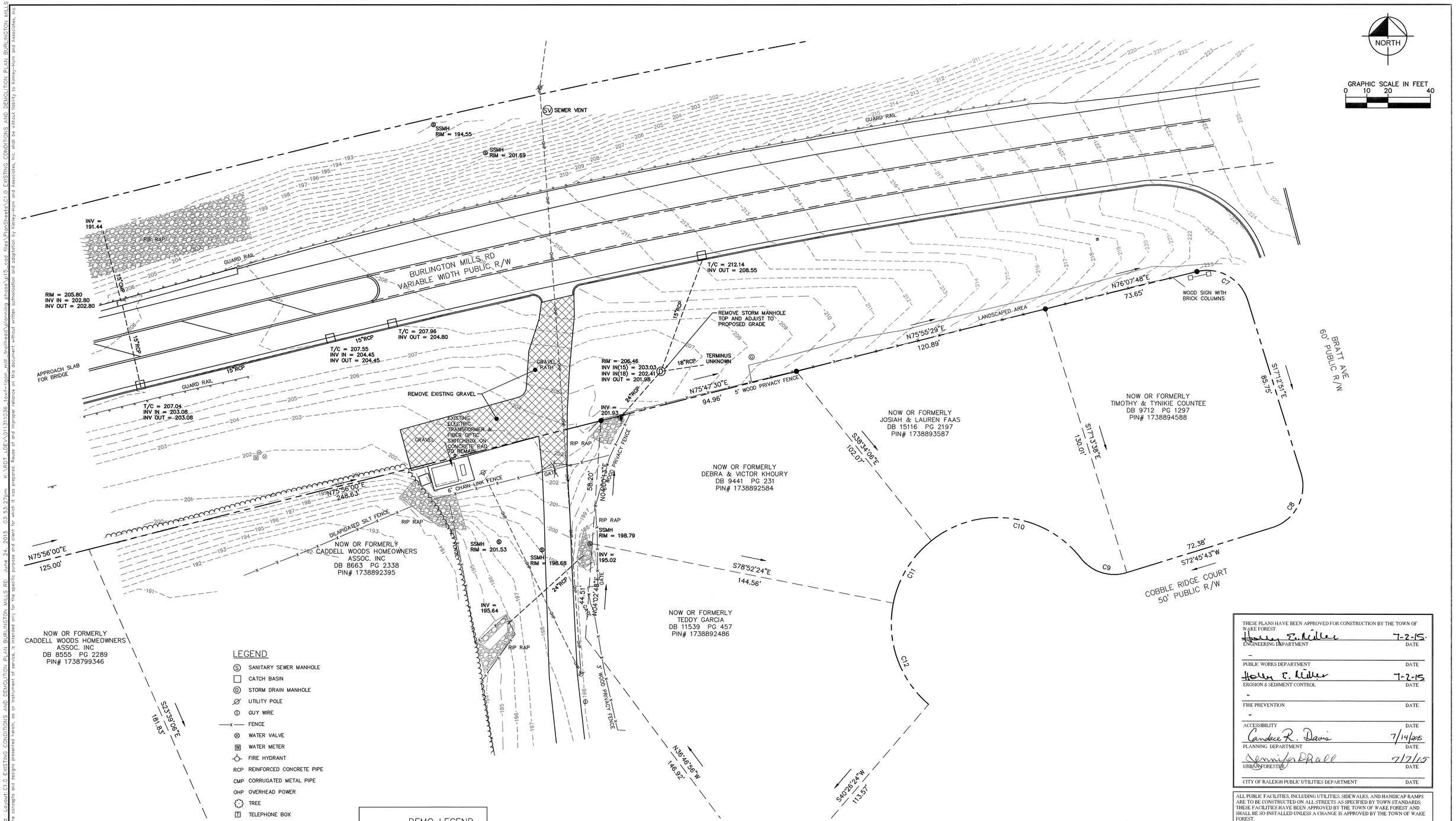

LEGEND

- (S) SANITARY SEWER MANHOLE
- CATCH BASIN
- (D) STORM DRAIN MANHOLE
- UTILITY POLE
- GUY WIRE
- —x— FENCE
- WATER VALVE
- (W) WATER METER
- FIRE HYDRANT
- RCP REINFORCED CONCRETE PIPE
- CMP CORRUGATED METAL PIPE
- OHP OVERHEAD POWER
- TREE
- (T) TELEPHONE BOX
- EXISTING IRON PIPE
- MAP CORNER
- R/W MONUMENT
- GAS TEST STATION

DEMO LEGEND

GRAVEL REMOVAL

SURVEY NOTES:
1. ALL DISTANCES ARE HORIZONTAL GROUND UNLESS OTHERWISE SHOWN.
2. DATUM IS NC GRID NAD 83/2012 BASED OFF OF THE NORTH CAROLINA VRS NETWORK.
3. BOUNDARY AND RIGHTS OF WAY SHOWN ARE DERIVED FROM GROUND SURVEY INFORMATION AND RECORDED MAPS.
4. UNDERGROUND UTILITIES SHOWN IF FOUND BUT WAS NOT PART OF THIS SURVEY.

SURVEY NOTE:
EXISTING CONDITIONS AND TOPOGRAPHICAL DATA PROVIDED BY BBM & ASSOCIATES, 1011 SCHAUB DRIVE, SUITE 102, RALEIGH, NC 27606, 919.833.7336, ON 04/15/15.

THESE PLANS HAVE BEEN APPROVED FOR CONSTRUCTION BY THE TOWN OF WAKE FOREST.

Holly E. Miller — ENGINEERING DEPARTMENT	7-2-15 DATE
– PUBLIC WORKS DEPARTMENT	DATE
Holly E. Miller — EROSION & SEDIMENT CONTROL	7-2-15 DATE
– FIRE PREVENTION	DATE
– ACCESSIBILITY	DATE
Candace R. Davis — PLANNING DEPARTMENT	7/14/2015 DATE
Jennifer D. Rall — URBAN FORESTER	7/7/15 DATE
CITY OF RALEIGH PUBLIC UTILITIES DEPARTMENT	DATE

ALL PUBLIC FACILITIES, INCLUDING UTILITIES, SIDEWALKS, AND HANDICAP RAMPS ARE TO BE CONSTRUCTED ON ALL STREETS AS SPECIFIED BY TOWN STANDARDS. THESE FACILITIES HAVE BEEN APPROVED BY THE TOWN OF WAKE FOREST AND SHALL BE SO INSTALLED UNLESS A CHANGE IS APPROVED BY THE TOWN OF WAKE FOREST.

EXECUTION OF THIS CONSTRUCTION PLAT BY THE REVIEW ENGINEER FOR THE TOWN OF WAKE FOREST IN NO WAY LIMITS THE RESPONSIBILITY OF THE OWNER AND ENGINEER OF RECORD WITH REGARD TO COMPLIANCE WITH ALL FEDERAL, STATE, AND LOCAL STANDARDS AND/OR CONDITIONS.

OWNER HEREBY CERTIFIES AND AGREES TO TAKE SUCH ACTION AS MAY BE REQUIRED BY THE TOWN OF WAKE FOREST TO CORRECT ANY ERRORS, OMISSIONS OR NON-COMPLIANCE WITH TOWN STANDARDS AND/OR CONDITIONS DESCRIBED IN THIS CONSTRUCTION PLAT, INCLUDING RE-SUBMISSION OR RE-EXECUTION OF THIS CONSTRUCTION PLAT WITH THE APPROPRIATE CORRECTIONS AND/OR REVISIONS.

No.	REVISIONS	DATE	BY

Kimley»Horn

© 2015 KIMLEY-HORN AND ASSOCIATES, INC.
333 FAYETTEVILLE STREET, SUITE 600, RALEIGH, NC 27601
PHONE: 919-835-1494
WWW.KIMLEY-HORN.COM
NC LICENSE # F-0102

KHA PROJECT 011311036
DATE 6/24/15
SCALE AS SHOWN
DESIGNED BY BPW
DRAWN BY BNR
CHECKED BY BPW

LIGON MILL TRAILHEAD
PREPARED FOR
TOWN OF WAKE FOREST

WAKE FOREST NC

NORTH CAROLINA PROFESSIONAL SEAL 033840 ENGINEER BRIAN D. KUZNIEWSKI 6/24/15

EXISTING CONDITIONS AND DEMOLITION PLAN BURLINGTON MILLS RD

SHEET NUMBER
C1.0

Plotted By:Roy, Bethany Sheet Set:Ligon Mill Trailhead Layout:C1.0 EXISTING CONDITIONS AND DEMOLITION PLAN BURLINGTON MILLS RD June 24, 2015 03:53:27pm K:\RDT_LDEV\011311036_tcp-ligon-mill_trailhead\planning phase\15_cpd_files\PlanSheets\C1.0 EXISTING CONDITIONS AND DEMOLITION PLAN BURLINGTON MILLS RD.d
This document, together with the concepts and designs presented herein, as an instrument of service, is intended only for the specific purpose and client for which it was prepared. Reuse of and improper reliance on this document without written authorization and adaptation by Kimley-Horn and Associates, Inc. shall be without liability to Kimley-Horn and Associates, Inc.

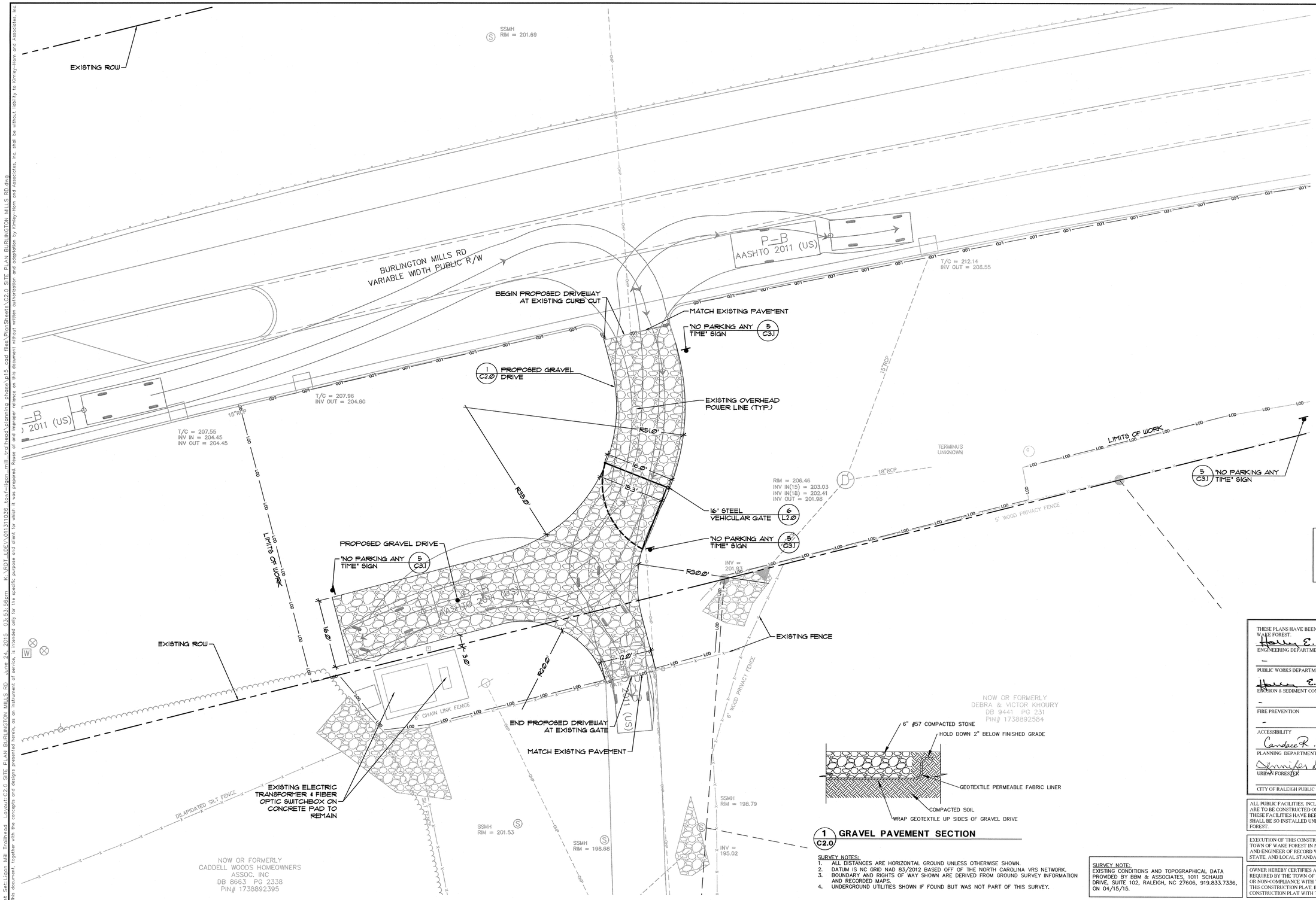

1 / C2.0 GRAVEL PAVEMENT SECTION

SURVEY NOTES:
1. ALL DISTANCES ARE HORIZONTAL GROUND UNLESS OTHERWISE SHOWN.
2. DATUM IS NC GRID NAD 83/2012 BASED OFF OF THE NORTH CAROLINA VRS NETWORK.
3. BOUNDARY AND RIGHTS OF WAY SHOWN ARE DERIVED FROM GROUND SURVEY INFORMATION AND RECORDED MAPS.
4. UNDERGROUND UTILITIES SHOWN IF FOUND BUT WAS NOT PART OF THIS SURVEY.

SURVEY NOTE:
EXISTING CONDITIONS AND TOPOGRAPHICAL DATA PROVIDED BY BBM & ASSOCIATES, 1011 SCHAUB DRIVE, SUITE 102, RALEIGH, NC 27606, 919.833.7336, ON 04/15/15.

NORTH

GRAPHIC SCALE IN FEET
0 5 10 20

LEGEND

- SANITARY SEWER MANHOLE
- CATCH BASIN
- STORM DRAIN MANHOLE
- UTILITY POLE
- GUY WIRE
- FENCE
- WATER VALVE
- WATER METER
- FIRE HYDRANT
- RCP REINFORCED CONCRETE PIPE
- CMP CORRUGATED METAL PIPE
- OHP OVERHEAD POWER
- TREE
- TELEPHONE BOX
- EXISTING IRON PIPE
- MAP CORNER
- R/W MONUMENT
- GAS TEST STATION
- "NO PARKING ANY TIME" SIGN

LEGEND

PROPOSED GRAVEL DRIVE

THESE PLANS HAVE BEEN APPROVED FOR CONSTRUCTION BY THE TOWN OF WAKE FOREST.

ENGINEERING DEPARTMENT	DATE 7-2-15
PUBLIC WORKS DEPARTMENT	DATE
EROSION & SEDIMENT CONTROL	DATE 7-2-15
FIRE PREVENTION	DATE
ACCESSIBILITY	DATE
PLANNING DEPARTMENT	DATE 7/14/2015
URBAN FORESTER	DATE 7/7/15
CITY OF RALEIGH PUBLIC UTILITIES DEPARTMENT	DATE

ALL PUBLIC FACILITIES, INCLUDING UTILITIES, SIDEWALKS, AND HANDICAP RAMPS ARE TO BE CONSTRUCTED ON ALL STREETS AS SPECIFIED BY TOWN STANDARDS. THESE FACILITIES HAVE BEEN APPROVED BY THE TOWN OF WAKE FOREST AND SHALL BE SO INSTALLED UNLESS A CHANGE IS APPROVED BY THE TOWN OF WAKE FOREST.

EXECUTION OF THIS CONSTRUCTION PLAT BY THE REVIEW ENGINEER FOR THE TOWN OF WAKE FOREST IN NO WAY LIMITS THE RESPONSIBILITY OF THE OWNER AND ENGINEER OF RECORD WITH REGARD TO COMPLIANCE WITH ALL FEDERAL, STATE, AND LOCAL STANDARDS AND/OR CONDITIONS.

OWNER HEREBY CERTIFIES AND AGREES TO TAKE SUCH ACTION AS MAY BE REQUIRED BY THE TOWN OF WAKE FOREST TO CORRECT ANY ERRORS, OMISSIONS OR NON-COMPLIANCE WITH TOWN STANDARDS AND/OR CONDITIONS DESCRIBED IN THIS CONSTRUCTION PLAT, INCLUDING RE-SUBMISSION OR RE-EXECUTION OF THIS CONSTRUCTION PLAT WITH THE APPROPRIATE CORRECTIONS AND/OR REVISIONS.

No.	REVISIONS	DATE	BY

Kimley»Horn

© 2015 KIMLEY-HORN AND ASSOCIATES, INC.
333 FAYETTEVILLE STREET, SUITE 600, RALEIGH, NC 27601
PHONE: 919-835-1494
WWW.KIMLEY-HORN.COM
NC LICENSE # F-0102

KHA PROJECT	011311036
DATE	6/24/15
SCALE	AS SHOWN
DESIGNED BY	BPW
DRAWN BY	BNR
CHECKED BY	BPW

LIGON MILL TRAILHEAD
PREPARED FOR
TOWN OF WAKE FOREST

WAKE FOREST NC

NORTH CAROLINA PROFESSIONAL SEAL 033805 ENGINEER BRYAN D. KUZEMCZAK 6/24/15

SITE PLAN
BURLINGTON MILLS RD

SHEET NUMBER
C2.0

Plotted By:Roy, Bethany Sheet Set:Ligon Mill Trailhead Layout:C2.0 SITE PLAN BURLINGTON MILLS RD June 24, 2015 03:53:56pm K:\RDT_LDEV\011311036 ton-ligon_mill_trailhead\planning phase\p15_cad files\PlanSheets\C2.0 SITE PLAN BURLINGTON MILLS RD.dwg
This document, together with the concepts and designs presented herein, as an instrument of service, is intended only for the specific purpose and client for which it was prepared. Reuse of and improper reliance on this document without written authorization and adaptation by Kimley-Horn and Associates, Inc. shall be without liability to Kimley-Horn and Associates, Inc.

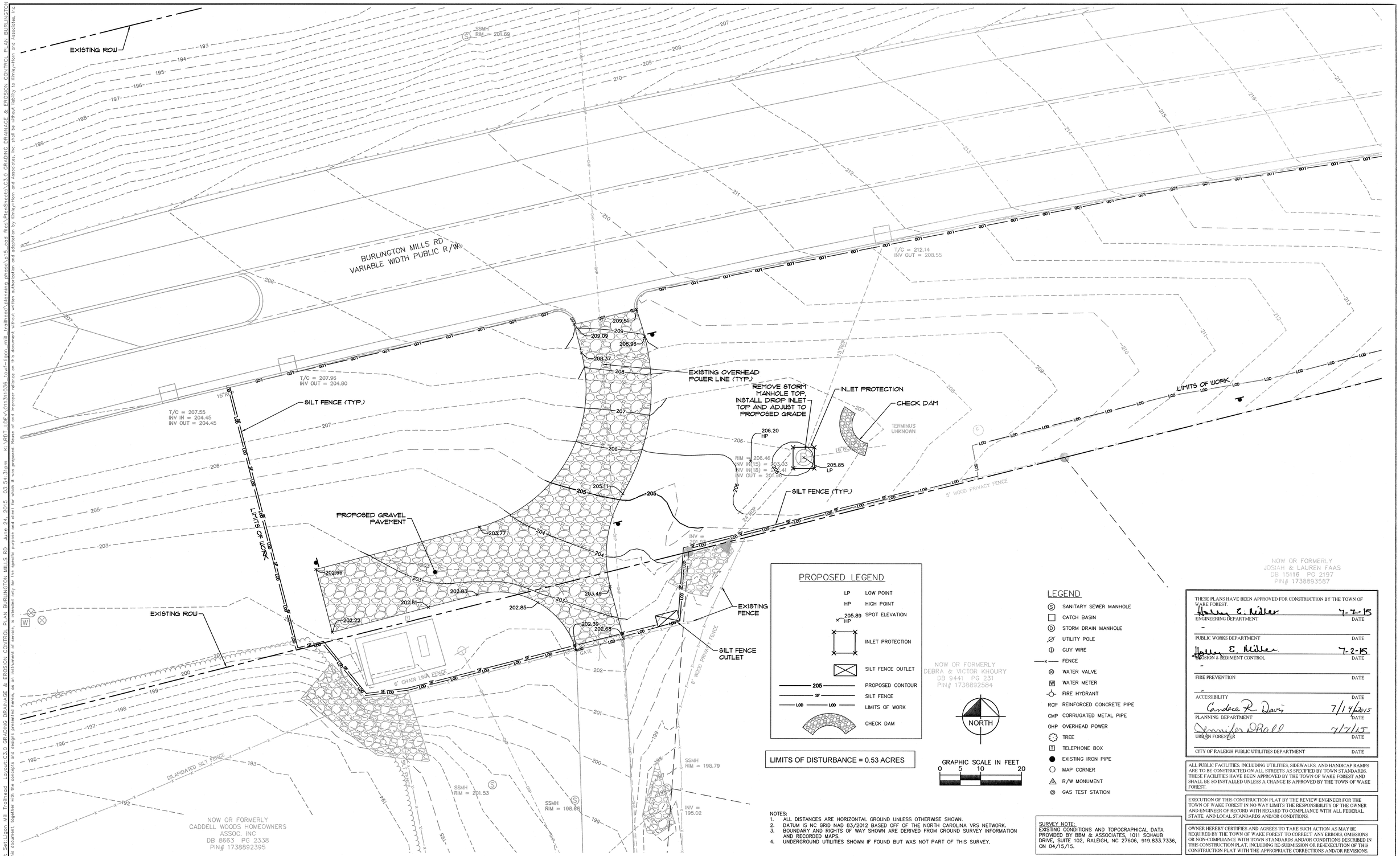

PROPOSED LEGEND

LP	LOW POINT
HP	HIGH POINT
205.89 HP	SPOT ELEVATION
	INLET PROTECTION
	SILT FENCE OUTLET
205	PROPOSED CONTOUR
SF	SILT FENCE
LOD	LIMITS OF WORK
	CHECK DAM

LIMITS OF DISTURBANCE = 0.53 ACRES

LEGEND

Ⓢ	SANITARY SEWER MANHOLE
□	CATCH BASIN
Ⓓ	STORM DRAIN MANHOLE
	UTILITY POLE
	GUY WIRE
—x—	FENCE
⊗	WATER VALVE
W	WATER METER
	FIRE HYDRANT
RCP	REINFORCED CONCRETE PIPE
CMP	CORRUGATED METAL PIPE
OHP	OVERHEAD POWER
	TREE
T	TELEPHONE BOX
●	EXISTING IRON PIPE
○	MAP CORNER
	R/W MONUMENT
	GAS TEST STATION

NOTES:
1. ALL DISTANCES ARE HORIZONTAL GROUND UNLESS OTHERWISE SHOWN.
2. DATUM IS NC GRID NAD 83/2012 BASED OFF OF THE NORTH CAROLINA VRS NETWORK.
3. BOUNDARY AND RIGHTS OF WAY SHOWN ARE DERIVED FROM GROUND SURVEY INFORMATION AND RECORDED MAPS.
4. UNDERGROUND UTILITIES SHOWN IF FOUND BUT WAS NOT PART OF THIS SURVEY.

SURVEY NOTE:
EXISTING CONDITIONS AND TOPOGRAPHICAL DATA PROVIDED BY BBM & ASSOCIATES, 1011 SCHAUB DRIVE, SUITE 102, RALEIGH, NC 27606, 919.833.7336, ON 04/15/15.

THESE PLANS HAVE BEEN APPROVED FOR CONSTRUCTION BY THE TOWN OF WAKE FOREST.

Holly E. Miller	7-2-15
ENGINEERING DEPARTMENT	DATE
–	
PUBLIC WORKS DEPARTMENT	DATE
Holly E. Miller	7-2-15
EROSION & SEDIMENT CONTROL	DATE
–	
FIRE PREVENTION	DATE
–	
ACCESSIBILITY	DATE
Candace R. Davis	7/14/2015
PLANNING DEPARTMENT	DATE
Jennifer O'Rall	7/7/15
URBAN FORESTER	DATE
CITY OF RALEIGH PUBLIC UTILITIES DEPARTMENT	DATE

ALL PUBLIC FACILITIES, INCLUDING UTILITIES, SIDEWALKS, AND HANDICAP RAMPS ARE TO BE CONSTRUCTED ON ALL STREETS AS SPECIFIED BY TOWN STANDARDS. THESE FACILITIES HAVE BEEN APPROVED BY THE TOWN OF WAKE FOREST AND SHALL BE SO INSTALLED UNLESS A CHANGE IS APPROVED BY THE TOWN OF WAKE FOREST.

EXECUTION OF THIS CONSTRUCTION PLAT BY THE REVIEW ENGINEER FOR THE TOWN OF WAKE FOREST IN NO WAY LIMITS THE RESPONSIBILITY OF THE OWNER AND ENGINEER OF RECORD WITH REGARD TO COMPLIANCE WITH ALL FEDERAL, STATE, AND LOCAL STANDARDS AND/OR CONDITIONS.

OWNER HEREBY CERTIFIES AND AGREES TO TAKE SUCH ACTION AS MAY BE REQUIRED BY THE TOWN OF WAKE FOREST TO CORRECT ANY ERRORS, OMISSIONS OR NON-COMPLIANCE WITH TOWN STANDARDS AND/OR CONDITIONS DESCRIBED IN THIS CONSTRUCTION PLAT, INCLUDING RE-SUBMISSION OR RE-EXECUTION OF THIS CONSTRUCTION PLAT WITH THE APPROPRIATE CORRECTIONS AND/OR REVISIONS.

No.	REVISIONS	DATE	BY

Kimley»Horn

© 2015 KIMLEY-HORN AND ASSOCIATES, INC.
333 FAYETTEVILLE STREET, SUITE 600, RALEIGH, NC 27601
PHONE: 919-835-1494
WWW.KIMLEY-HORN.COM
NC LICENSE # F-0102

KHA PROJECT	011311036
DATE	6/24/15
SCALE	AS SHOWN
DESIGNED BY	BPW
DRAWN BY	BNR
CHECKED BY	BPW

LIGON MILL TRAILHEAD

PREPARED FOR

TOWN OF WAKE FOREST

WAKE FOREST NC

NORTH CAROLINA PROFESSIONAL SEAL 033847 ENGINEER JOHN D. KUZENSKI 6/24/15

GRADING DRAINAGE & EROSION CONTROL PLAN BURLINGTON MILLS RD

SHEET NUMBER

C3.0

Plotted By:Ray, Bethany Sheet Set:Ligon Mill Trailhead Layout:C3.0 GRADING DRAINAGE & EROSION CONTROL PLAN BURLINGTON MILLS RD June 24, 2015 03:54:31pm K:\RDT_LDEV\011311036 towf-ligon mill trailhead\planning phase\c15 cad files\PlanSheets\C3.0 GRADING DRAINAGE & EROSION CONTROL PLAN BURLINGTON MILLS
This document, together with the concepts and designs presented herein, as an instrument of service, is intended only for the specific purpose and client for which it was prepared. Reuse of and improper reliance on this document without written authorization and adaptation by Kimley-Horn and Associates, Inc. shall be without liability to Kimley-Horn and Associates, Inc.

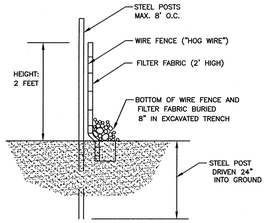

SECTION

NOTES:

a. FABRIC SHALL EXTEND INTO TRENCH 8-INCHES DOWN AND 4-INCHES FORWARD ALONG TRENCH.
b. INSPECT SILT FENCE AT LEAST ONCE A WEEK AND AFTER EVERY RAINFALL. MAKE ANY REQUIRED REPAIRS IMMEDIATELY.
c. SHOULD FABRIC OF SILT FENCE COLLAPSE, TEAR, DECOMPOSE OR BECOME INEFFECTIVE,REPLACE IT PROMPTLY.
d. REMOVE SEDIMENT DEPOSITS AS NECESSARY TO PROVIDE ADEQUATE STORAGE VOLUME FOR NEXT RAIN AND TO REDUCE PRESSURE ON THE FENCE. TAKE CARE TO AVOID UNDERMINING THE FENCE DURING CLEANOUT.
e. IF THE TOP OF SEDIMENT ELEVATION REACHES ONE-THIRD (1/3) OF THE HEIGHT OF THE FENCE, SEDIMENT MUST BE REMOVED.
f. REMOVE ALL FENCING MATERIALS AND UNSTABLE SEDIMENT DEPOSITS AND BRING THE AREA TO GRADE AND STABILIZE IT AFTER THE CONTRIBUTING DRAINAGE AREA HAS BEEN PROPERLY STABILIZED.

1 / C3.1 SEDIMENT FENCE (SILT)
NOT TO SCALE

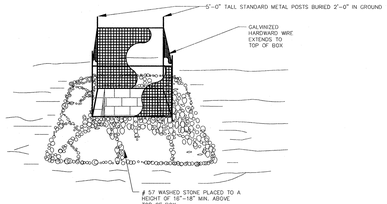

NOTE: TO BE INSTALLED AROUND ALL CURB INLETS UNTIL CURB IS POURED.

MAINTENANCE NOTE:

INSPECT INLETS AT LEAST WEEKLY AND AFTER EACH SIGNIFICANT (½" OR GREATER) RAINFALL EVENT. CLEAR THE MESH WIRE OF ANY DEBRIS OR OTHER OBJECTS TO PROVIDE ADEQUATE FLOW FOR SUBSEQUENT RAINS. TAKE CARE NOT TO DAMAGE OR UNDERCUT THE WIRE MESH DURING SEDIMENT REMOVAL. REPLACE STONE AS NEEDED.

2 / C3.1 INSTALLATION OF FABRIC AND SUPPORTING FRAME FOR INLET PROTECTION
NOT TO SCALE

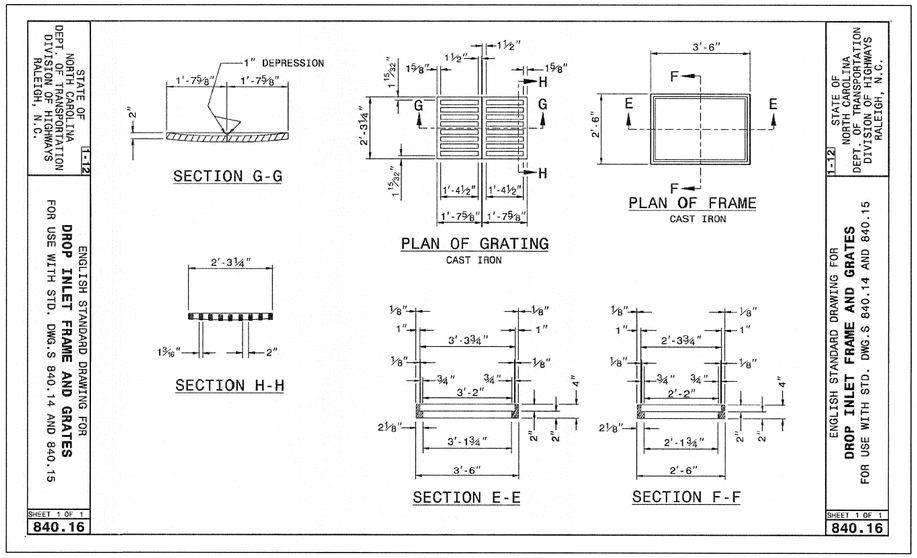

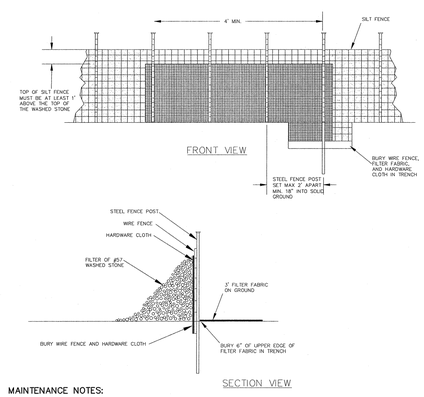

MAINTENANCE NOTES:

INSPECT GRAVEL OUTLETS AT LEAST WEEKLY AND AFTER EACH SIGNIFICANT (1/2 INCH OR GREATER) RAINFALL EVENT AND REPAIR IMMEDIATELY. CLEAN OUT SEDIMENT WHEN HALF OF STONE OUTLET IS COVERED.

TAKE CARE NOT TO DAMAGE OR UNDERCUT THE STRUCTURE DURING SEDIMENT REMOVAL. REMOVE DEBRIS FROM THE OUTLET AND REPLACE GRAVEL AS NEEDED TO ENSURE DEWATERING.

NOTES:
1. REMOVE SEDIMENT WHEN HALF OF STONE OUTLET IS COVERED.
2. REPLACE STONE AS NEEDED TO ENSURE DEWATERING.

3 / C3.1 SILT FENCE OUTLET
NOT TO SCALE

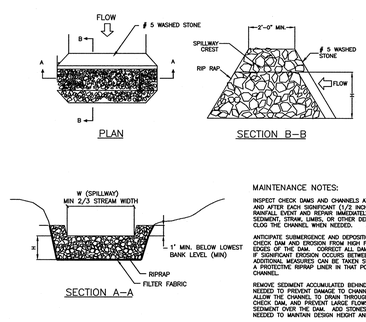

MAINTENANCE NOTES:

INSPECT CHECK DAMS AND CHANNELS AT LEAST WEEKLY AND AFTER EACH SIGNIFICANT (1/2 INCH OR GREATER) RAINFALL EVENT AND REPAIR IMMEDIATELY. CLEAN OUT SEDIMENT, STRAW, LIMES, OR OTHER DEBRIS THAT COULD CLOG THE CHANNEL WHEN NEEDED.

ANTICIPATE SUBMERGENCE AND DEPOSITION ABOVE THE CHECK DAM AND EROSION FROM HIGH FLOWS AROUND THE EDGES OF THE DAM. CORRECT ALL DAMAGE IMMEDIATELY. IF SIGNIFICANT EROSION OCCURS BETWEEN DAMS, ADDITIONAL MEASURES CAN BE TAKEN SUCH AS, INSTALLING A PROTECTIVE RIPRAP LINER IN THAT PORTION OF THE CHANNEL.

REMOVE SEDIMENT ACCUMULATED BEHIND THE DAMS AS NEEDED TO PREVENT DAMAGE TO CHANNEL VEGETATION, ALLOW THE CHANNEL TO DRAIN THROUGH THE STONE CHECK DAM, AND PREVENT LARGE FLOWS FROM CARRYING SEDIMENT OVER THE DAM. ADD STONES TO DAMS AS NEEDED TO MAINTAIN DESIGN HEIGHT AND CROSS SECTION.

4 / C3.1 ROCK CHECK DAM
NOT TO SCALE

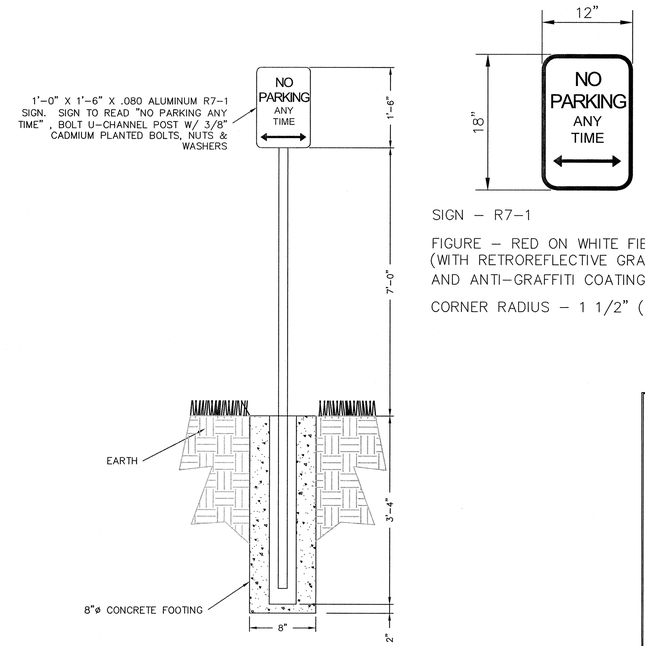

SIGN – R7-1

FIGURE – RED ON WHITE FIELD (WITH RETROREFLECTIVE GRAPHICS AND ANTI-GRAFFITI COATING)

CORNER RADIUS – 1 1/2" (TYP.)

5 / C3.1 NO PARKING ANY TIME SIGN DETAILS
NOT TO SCALE

THESE PLANS HAVE BEEN APPROVED FOR CONSTRUCTION BY THE TOWN OF WAKE FOREST.

Holly E. Nidler — ENGINEERING DEPARTMENT	7-2-15 DATE
– PUBLIC WORKS DEPARTMENT	DATE
Holly E. Nidler — EROSION & SEDIMENT CONTROL	7-2-15 DATE
– FIRE PREVENTION	DATE
ACCESSIBILITY	DATE
Candace R. Davis — PLANNING DEPARTMENT	7/14/15 DATE
N/A — URBAN FORESTER	DATE
CITY OF RALEIGH PUBLIC UTILITIES DEPARTMENT	DATE

ALL PUBLIC FACILITIES, INCLUDING UTILITIES, SIDEWALKS, AND HANDICAP RAMPS ARE TO BE CONSTRUCTED ON ALL STREETS AS SPECIFIED BY TOWN STANDARDS. THESE FACILITIES HAVE BEEN APPROVED BY THE TOWN OF WAKE FOREST AND SHALL BE SO INSTALLED UNLESS A CHANGE IS APPROVED BY THE TOWN OF WAKE FOREST.

EXECUTION OF THIS CONSTRUCTION PLAT BY THE REVIEW ENGINEER FOR THE TOWN OF WAKE FOREST IN NO WAY LIMITS THE RESPONSIBILITY OF THE OWNER AND ENGINEER OF RECORD WITH REGARD TO COMPLIANCE WITH ALL FEDERAL, STATE, AND LOCAL STANDARDS AND/OR CONDITIONS.

OWNER HEREBY CERTIFIES AND AGREES TO TAKE SUCH ACTION AS MAY BE REQUIRED BY THE TOWN OF WAKE FOREST TO CORRECT ANY ERRORS, OMISSIONS OR NON-COMPLIANCE WITH TOWN STANDARDS AND/OR CONDITIONS DESCRIBED IN THIS CONSTRUCTION PLAT, INCLUDING RE-SUBMISSION OR RE-EXECUTION OF THIS CONSTRUCTION PLAT WITH THE APPROPRIATE CORRECTIONS AND/OR REVISIONS.

No.	REVISIONS	DATE	BY

Kimley»Horn

© 2015 KIMLEY-HORN AND ASSOCIATES, INC.
333 FAYETTEVILLE STREET, SUITE 600, RALEIGH, NC 27601
PHONE: 919-835-1494
WWW.KIMLEY-HORN.COM
NC LICENSE # F-0102

KHA PROJECT	011311036
DATE	6/24/15
SCALE	AS SHOWN
DESIGNED BY	BPW
DRAWN BY	BNR
CHECKED BY	BPW

LIGON MILL TRAILHEAD
PREPARED FOR
TOWN OF WAKE FOREST
WAKE FOREST NC

NORTH CAROLINA PROFESSIONAL SEAL 033844 ENGINEER BRIAN D. KUZEMKA 6/24/15

SITE DETAILS BURLINGTON MILLS RD

SHEET NUMBER
C3.1

Plotted By:Roy, Bethany Sheet Set:Ligon Mill Trailhead Layout:C3.1 SITE DETAILS BURLINGTON MILLS RD June 24, 2015 03:54:42pm K:\RDT_LDEV\011311036_towf-ligon_mill_trailhead\planning phase\p15_cad files\Plan\Sheets\C3.1 SITE DETAILS BURLINGTON MILLS RD.dwg
This document, together with the concepts and designs presented herein, as an instrument of service, is intended only for the specific purpose and client for which it was prepared. Reuse of and improper reliance on this document without written authorization and adaptation by Kimley-Horn and Associates, Inc. shall be without liability to Kimley-Horn and Associates, Inc.

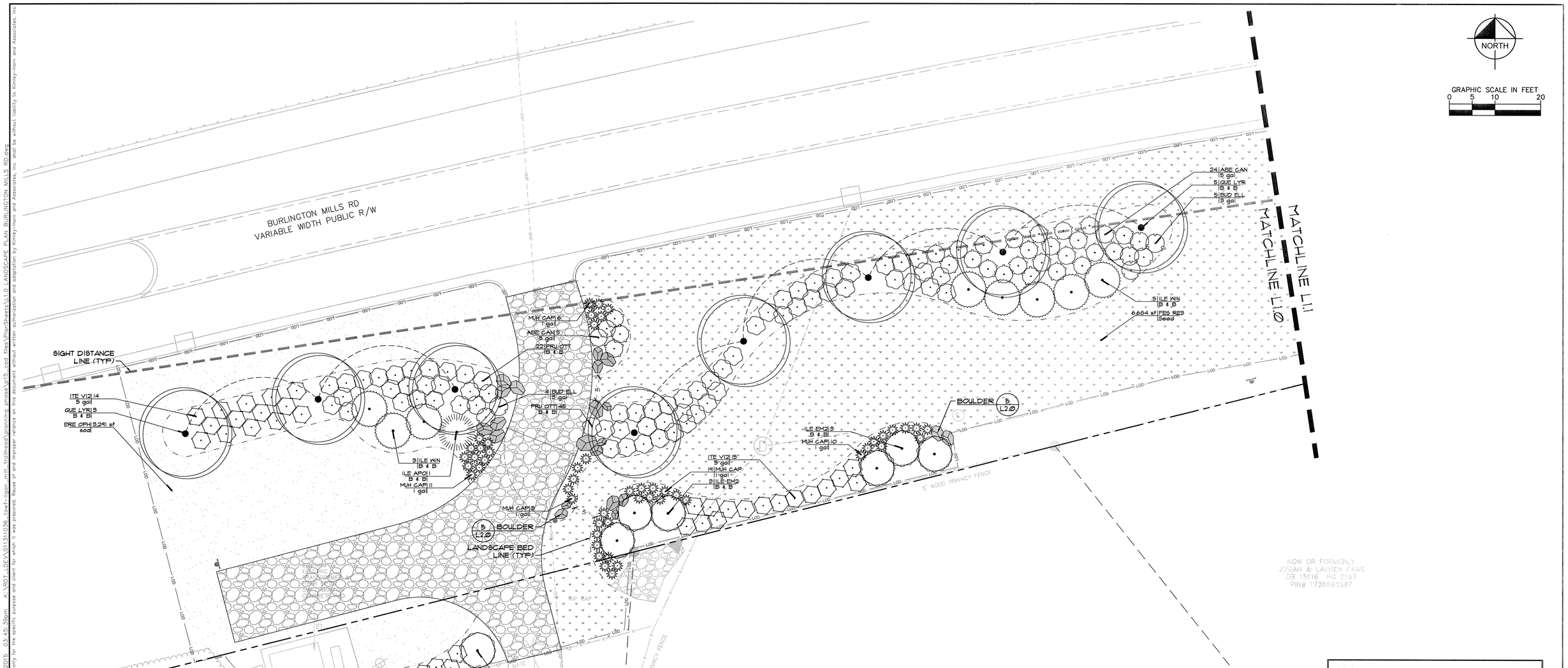

PLANT SCHEDULE A

TREES	QTY	BOTANICAL NAME	COMMON NAME	CONT	CAL	SIZE		REMARKS
QUE LYR	8	Quercus lyrata	Overcup Oak	B & B	3"Cal	16' HT.		
SHRUBS	**QTY**	**BOTANICAL NAME**	**COMMON NAME**	**SIZE**	**WIDTH**	**HEIGHT**	**SPACING**	**REMARKS**
ABE CAN	29	Abelia x grandiflora 'Canyon Creek'	Glossy Abelia	5 gal	24"	36"	48" o.c.	
BUD ELL	9	Buddleja davidii 'Ellen's Blue'	Butterfly Bush	3 gal	18"	36"	48" o.c.	
ILE APO	1	Ilex verticillata 'Apollo'	Winterberry	B & B	3'	6'	96" o.c.	
ILE EM2	7	Ilex x 'Emily Bruner'	Emily Bruner Holly	B & B	4'	8'	96" o.c.	
ILE WIN	8	Ilex verticillata 'Winter Red'	Winter Red Holly	B & B	3'	6'	96" o.c.	
ITE V12	38	Itea virginica	Virginia Willow	5 gal	24"	36"	48" o.c.	
MUH CAP	51	Muhlenbergia capillaris	Pink Muhly	1 gal	18"	18"	30" o.c.	
PRU OTT	67	Prunus laurocerasus 'Otto Luyken'	Luykens Laurel	B & B	24"	36"	48" o.c.	
SOD/SEED	**QTY**	**BOTANICAL NAME**	**COMMON NAME**	**CONT**	**WIDTH**	**HEIGHT**	**SPACING**	**REMARKS**
ERE OPH	3,291 sf	Eremochloa ophiuroides 'Tif Blair'	Tif Blair Centipede grass	sod				
FES RE3	6,684 sf	Festuca arundinacea 'Rebel IV'	Tall Fescue	Seed				

THESE PLANS HAVE BEEN APPROVED FOR CONSTRUCTION BY THE TOWN OF WAKE FOREST.

Holly E. Miller — ENGINEERING DEPARTMENT	DATE 7-2-15
– PUBLIC WORKS DEPARTMENT	DATE
Holly E. Miller — EROSION & SEDIMENT CONTROL	DATE 7-2-15
– FIRE PREVENTION	DATE
Candace R. Davis — ACCESSIBILITY	DATE 7/14/15
Jennifer O'Rall — PLANNING DEPARTMENT	DATE 7/7/15
URBAN FORESTER	DATE
CITY OF RALEIGH PUBLIC UTILITIES DEPARTMENT	DATE

ALL PUBLIC FACILITIES, INCLUDING UTILITIES, SIDEWALKS, AND HANDICAP RAMPS ARE TO BE CONSTRUCTED ON ALL STREETS AS SPECIFIED BY TOWN STANDARDS. THESE FACILITIES HAVE BEEN APPROVED BY THE TOWN OF WAKE FOREST AND SHALL BE SO INSTALLED UNLESS A CHANGE IS APPROVED BY THE TOWN OF WAKE FOREST.

EXECUTION OF THIS CONSTRUCTION PLAT BY THE REVIEW ENGINEER FOR THE TOWN OF WAKE FOREST IN NO WAY LIMITS THE RESPONSIBILITY OF THE OWNER AND ENGINEER OF RECORD WITH REGARD TO COMPLIANCE WITH ALL FEDERAL, STATE, AND LOCAL STANDARDS AND/OR CONDITIONS.

OWNER HEREBY CERTIFIES AND AGREES TO TAKE SUCH ACTION AS MAY BE REQUIRED BY THE TOWN OF WAKE FOREST TO CORRECT ANY ERRORS, OMISSIONS OR NON-COMPLIANCE WITH TOWN STANDARDS AND/OR CONDITIONS DESCRIBED IN THIS CONSTRUCTION PLAT, INCLUDING RE-SUBMISSION OR RE-EXECUTION OF THIS CONSTRUCTION PLAT WITH THE APPROPRIATE CORRECTIONS AND/OR REVISIONS.

No.	REVISIONS	DATE	BY

Kimley»Horn

© 2015 KIMLEY-HORN AND ASSOCIATES, INC.
333 FAYETTEVILLE STREET, SUITE 600, RALEIGH, NC 27601
PHONE: 919-835-1494
WWW.KIMLEY-HORN.COM
NC LICENSE # F-0102

KHA PROJECT 011311036
DATE 6/24/15
SCALE AS SHOWN
DESIGNED BY BPW
DRAWN BY BNR
CHECKED BY BPW

LIGON MILL TRAILHEAD
PREPARED FOR
TOWN OF WAKE FOREST

WAKE FOREST NC

NORTH CAROLINA PROFESSIONAL ENGINEER SEAL 1625 BRANDON PHILLIP WHITE
06.24.2015

LANDSCAPE PLAN
BURLINGTON MILLS RD

SHEET NUMBER
L1.0

Plotted By:Roy, Bethany Sheet Set:Ligon Mill Trailhead Layout:L1.0 LANDSCAPE PLAN BURLINGTON MILLS RD June 24, 2015 03:45:39pm K:\RDU_LDEV\011311036 - town-ligon mill trailhead\planning phase\p15-cad files\PlanSheets\L1.0 LANDSCAPE PLAN BURLINGTON MILLS RD.dwg
This document, together with the concepts and designs presented herein, as an instrument of service, is intended only for the specific purpose and client for which it was prepared. Reuse of and improper reliance on this document without written authorization and adaptation by Kimley-Horn and Associates, Inc. shall be without liability to Kimley-Horn and Associates, Inc.

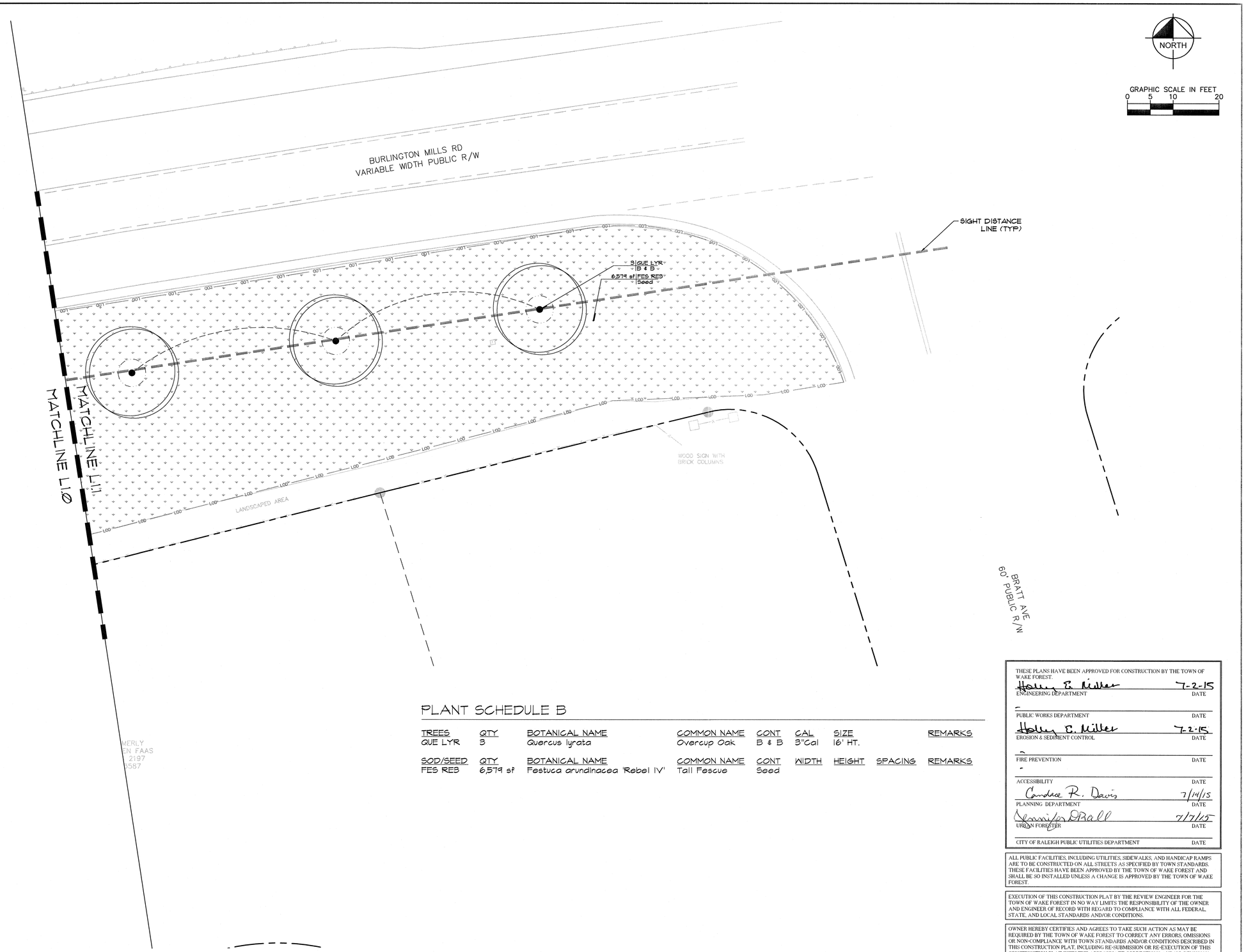

PLANT SCHEDULE B

TREES	QTY	BOTANICAL NAME	COMMON NAME	CONT	CAL	SIZE	REMARKS
QUE LYR	3	Quercus lyrata	Overcup Oak	B & B	3"Cal	16' HT.	

SOD/SEED	QTY	BOTANICAL NAME	COMMON NAME	CONT	WIDTH	HEIGHT	SPACING	REMARKS
FES RE3	6,574 sf	Festuca arundinacea 'Rebel IV'	Tall Fescue	Seed				

THESE PLANS HAVE BEEN APPROVED FOR CONSTRUCTION BY THE TOWN OF WAKE FOREST.

Holly B. Miller — 7-2-15
ENGINEERING DEPARTMENT — DATE

PUBLIC WORKS DEPARTMENT — DATE

Holly B. Miller — 7-2-15
EROSION & SEDIMENT CONTROL — DATE

FIRE PREVENTION — DATE

ACCESSIBILITY — DATE

Candace R. Davis — 7/14/15
PLANNING DEPARTMENT — DATE

Jennifer O'Neill — 7/7/15
URBAN FORESTER — DATE

CITY OF RALEIGH PUBLIC UTILITIES DEPARTMENT — DATE

ALL PUBLIC FACILITIES, INCLUDING UTILITIES, SIDEWALKS, AND HANDICAP RAMPS ARE TO BE CONSTRUCTED ON ALL STREETS AS SPECIFIED BY TOWN STANDARDS. THESE FACILITIES HAVE BEEN APPROVED BY THE TOWN OF WAKE FOREST AND SHALL BE SO INSTALLED UNLESS A CHANGE IS APPROVED BY THE TOWN OF WAKE FOREST.

EXECUTION OF THIS CONSTRUCTION PLAT BY THE REVIEW ENGINEER FOR THE TOWN OF WAKE FOREST IN NO WAY LIMITS THE RESPONSIBILITY OF THE OWNER AND ENGINEER OF RECORD WITH REGARD TO COMPLIANCE WITH ALL FEDERAL, STATE, AND LOCAL STANDARDS AND/OR CONDITIONS.

OWNER HEREBY CERTIFIES AND AGREES TO TAKE SUCH ACTION AS MAY BE REQUIRED BY THE TOWN OF WAKE FOREST TO CORRECT ANY ERRORS, OMISSIONS OR NON-COMPLIANCE WITH TOWN STANDARDS AND/OR CONDITIONS DESCRIBED IN THIS CONSTRUCTION PLAT, INCLUDING RE-SUBMISSION OR RE-EXECUTION OF THIS CONSTRUCTION PLAT WITH THE APPROPRIATE CORRECTIONS AND/OR REVISIONS.

No.	REVISIONS	DATE	BY

Kimley»Horn

© 2015 KIMLEY-HORN AND ASSOCIATES, INC.
333 FAYETTEVILLE STREET, SUITE 600, RALEIGH, NC 27601
PHONE: 919-835-1494
WWW.KIMLEY-HORN.COM
NC LICENSE # F-0102

KHA PROJECT 011311036
DATE 6/24/15
SCALE AS SHOWN
DESIGNED BY BPW
DRAWN BY BNR
CHECKED BY BPW

LIGON MILL TRAILHEAD
PREPARED FOR
TOWN OF WAKE FOREST

WAKE FOREST NC

NORTH CAROLINA PROFESSIONAL ENGINEER SEAL 1625 REGISTERED BRANDON PHILLIP WHITE
06.24.2015

LANDSCAPE PLAN
BURLINGTON MILLS RD

SHEET NUMBER
L1.1

Plotted By:Roy, Bethany Sheet Set:Ligon Mill Trailhead Layout:L1.1 LANDSCAPE PLAN BURLINGTON MILLS RD June 24, 2015 03:46:20pm K:\RDT_DEV\011311036_town-ligon_mill_trailhead\planning phase\p15_cad files\PlanSheets\L1.1 LANDSCAPE PLAN BURLINGTON MILLS RD.dwg
This document, together with the concepts and designs presented herein, as an instrument of service, is intended only for the specific purpose and client for which it was prepared. Reuse of and improper reliance on this document without written authorization and adaptation by Kimley-Horn and Associates, Inc. shall be without liability to Kimley-Horn and Associates, Inc.

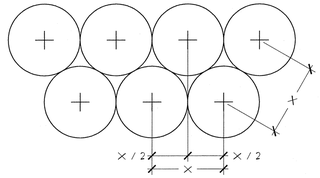

PLANT SPACING NOTES:

1. SEE PLANTING PLAN FOR SHRUB AND GROUNDCOVER AREAS.
2. PLANT MATERIAL SHALL BE INSTALLED IN STRAIGHT AND PARALLEL ROWS UNLESS OTHERWISE SHOWN ON DRAWINGS.
3. SEE PLANTING PLAN AND / OR PLANT SCHEDULE FOR ACTUAL PLANT SPACING.

1 / L2.0 TYPICAL STAGGERED ROW PLANT SPACING

PLAN & SECTION
SCALE: 1/2"=1'-0"

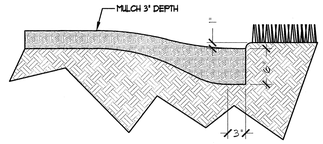

PLANTING BED TRENCH EDGING NOTE:

1. TRENCH EDGE SHALL BE LOCATED BETWEEN PLANTING BED AND ALL TURF OR NATIVE GRASS AREAS.
2. TRENCH EDGE SHALL BE CONSTRUCTED ALONG ALL HARDSCAPE AREAS FOR SIMILAR CONDITION.
3. MAINTAIN POSITIVE DRAINAGE IN ALL PLANTING BEDS.
4. SEE PLANT SCHEDULE FOR TYPE OF MULCH.

3 / L2.0 PLANTING BED TRENCH EDGING

SECTION
SCALE: 1"=1'-0"

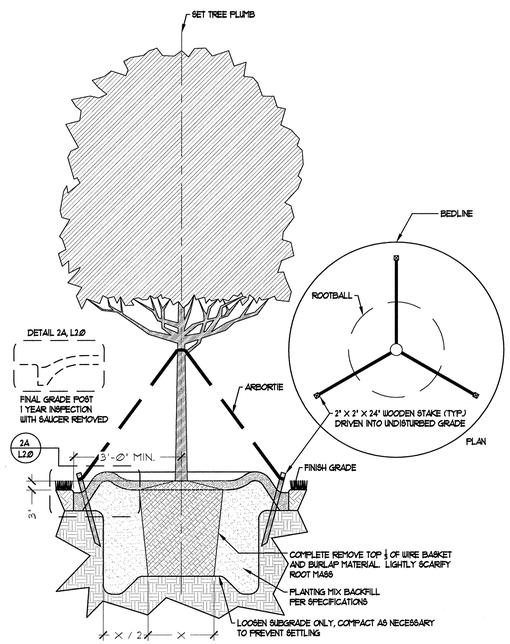

TREE PLANTING NOTES:

1. SET TREE MIN. 3" ABOVE SURROUNDING FINISH GRADE. MEASURED AT BASE OF TRUNK.
2. REDUCE TYPICAL 3" MULCH DEPTH SURROUNDING WOODY TRUNK TO 2" DEEP AND PULL MUCH BACK 3" FROM TRUNK.

2 / L2.0 TYPICAL TREE PLANTING & GUYING

PLAN & SECTION
SCALE: 1/2"=1'-0"

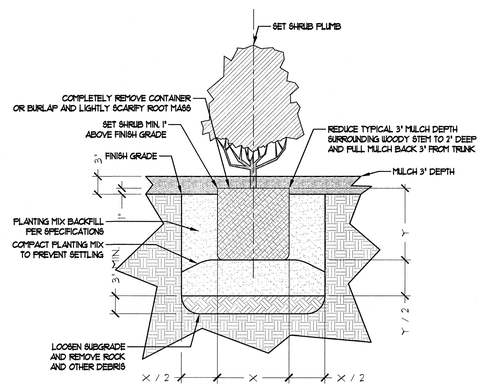

GENERAL LANDSCAPE NOTES:

1. ALL PLANT MATERIAL PRICING SHALL INCLUDE MULCH, BED PREPARATION, AND STAKING.
2. ALL PLANTING BEDS SHALL RECEIVE 3" (THREE INCHES) OF MULCH.

   MULCH TYPE FOR PROJECT: DOUBLE SHREDDED HARDWOOD MULCH OR CURRENT TOWN STANDARD
3. PLANT MATERIAL SPACING SHOWN ON LANDSCAPE PLANS SHALL OVERRIDE TYPICAL PLANT SPACING INDICATED ON PLANT SCHEDULE. LANDSCAPE CONTRACTOR RESPONSIBLE FOR VERIFYING ALL PLANT SPACING AND MAKING MINOR FIELD ADJUSTMENTS DUE TO UTILITY CONFLICTS.

4 / L2.0 TYPICAL SHRUB PLANTING

SECTION
SCALE: 1"=1'-0"

GENERAL LANDSCAPE NOTES:

ALL PLANTS MUST BE HEALTHY, VIGOROUS MATERIAL, FREE OF PESTS AND DISEASE.

ALL PLANTS MUST BE CONTAINER GROWN OR BALLED AND BURLAPPED AS INDICATED IN THE PLANT LIST.

ALL TREES MUST HAVE A STRAIGHT TRUNK AND FULL HEADED AND MEET ALL REQUIREMENTS SPECIFIED.

ALL PLANTS ARE SUBJECT TO THE APPROVAL OF THE LANDSCAPE ARCHITECT BEFORE, DURING, AND AFTER INSTALLATION.

ALL TREES MUST BE GUYED OR STAKED AS SHOWN IN THE DETAILS.

ALL SHADE TREES LOCATED WITHIN VEHICLE SIGHT TRIANGLES SHALL BE BRANCHED MIN. 8' (MEASURED FROM ADJACENT PROJECTED CURB LINE ELEVATION) PER ANSI Z60.1 STANDARDS FOR HEIGHT OF BRANCHING - STREET TREES.

ALL PLANTING AREAS MUST BE COMPLETELY MULCHED AS SPECIFIED.

PRIOR TO CONSTRUCTION, THE CONTRACTOR SHALL BE RESPONSIBLE FOR LOCATING ALL UNDERGROUND UTILITIES AND SHALL AVOID DAMAGE TO ALL UTILITIES AND SHALL AVOID DAMAGE TO ALL UTILITIES DURING THE COURSE OF THE WORK. THE CONTRACTOR IS RESPONSIBLE FOR REPAIRING ANY AND ALL DAMAGE TO UTILITIES, STRUCTURES, SITE APPURTENANCES, ETC. WHICH OCCURS AS A RESULT OF THE LANDSCAPE CONSTRUCTION.

THE CONTRACTOR IS RESPONSIBLE FOR VERIFYING ALL QUANTITIES SHOWN ON THESE PLANS BEFORE PRICING THE WORK. ANY DISCREPANCIES BETWEEN QUANTITIES ON PLAN AND PLANT LIST SHALL BE BROUGHT TO THE ATTENTION OF TOWN OF WAKE FOREST INSPECTOR AND ANY FIELD ADJUSTMENTS OR QUANTITY ADJUSTMENTS MUST BE AUTHORIZED PRIOR TO PLANTING.

THE CONTRACTOR IS RESPONSIBLE FOR FULLY MAINTAINING ALL PLANTING (INCLUDING BUT NOT LIMITED TO: WATERING, SPRAYING, MULCHING, FERTILIZING, ETC.) OF THE PLANTING AREAS AND LAWN UNTIL SUBSTANTIAL COMPLETION.

THE CONTRACTOR SHALL COMPLETELY GUARANTEE ALL PLANT MATERIAL FOR A PERIOD OF TWO (2) YEAR BEGINNING ON THE DATE OF SUBSTANTIAL COMPLETION. THE CONTRACTOR SHALL PROMPTLY MAKE ALL REPLACEMENTS BEFORE OR AT THE END OF THE GUARANTEE PERIOD.

THE LANDSCAPE ARCHITECT SHALL APPROVE THE STAKING LOCATION OF ALL PLANT MATERIAL PRIOR TO INSTALLATION.

AFTER BEING DUG AT THE NURSERY SOURCE, ALL TREES IN LEAF SHALL BE ACCLIMATED FOR TWO (2) WEEKS UNDER A MIST SYSTEM PRIOR TO INSTALLATION.

ANY PLANT MATERIAL WHICH DIES, TURNS BROWN, OR DEFOLIATES (PRIOR TO SUBSTANTIAL COMPLETION OF THE WORK) SHALL BE PROMPTLY REMOVED FROM THE SITE AND REPLACED WITH MATERIAL OF THE SAME SPECIES, QUANTITY, AND SIZE AND MEETING ALL PLANT SCHEDULE SPECIFICATIONS.

STANDARDS SET FORTH IN "AMERICAN STANDARD FOR NURSERY STOCK" REPRESENT GUIDELINE SPECIFICATIONS ONLY AND SHALL CONSTITUTE MINIMUM QUALITY REQUIREMENTS FOR PLANT MATERIAL.

ALL SHRUB, GROUND COVER AND SEASONAL COLOR ANNUAL PLANTING BEDS ARE TO BE COMPLETELY COVERED WITH SHREDDED HARDWOOD MULCH OR CURRENT TOWN STANDARD TO A DEPTH OF THREE (3) INCHES.

LOCATIONS OF EXISTING BURIED UTILITY LINES SHOWN ON THE PLANS ARE BASED UPON BEST AVAILABLE INFORMATION AND ARE TO BE CONSIDERED APPROXIMATE. IT SHALL BE THE RESPONSIBILITY OF THE CONTRACTOR TO VERIFY THE LOCATIONS OF UTILITY LINES AND ADJACENT TO THE WORK AREA. THE CONTRACTOR IS RESPONSIBLE FOR THE PROTECTION OF ALL UTILITY LINES DURING THE CONSTRUCTION PERIOD.

SAFE, CLEARLY MARKED PEDESTRIAN AND VEHICULAR ACCESS TO ALL ADJACENT PROPERTIES MUST BE MAINTAINED THROUGHOUT THE CONSTRUCTION PROCESS.

ALL PLANT MATERIAL QUANTITIES SHOWN ARE APPROXIMATE. CONTRACTOR SHALL BE RESPONSIBLE FOR COMPLETE COVERAGE OF ALL PLANTING BEDS AT SPACING SHOWN.

ALL DEAD, BROKEN, OR CIRCLING ROOTS MUST BE CUT CLEANLY BEFORE BACKFILLING, SO THAT ALL ROOTS ARE HEALTHY AND GROWING DIRECTLY INTO THE SURROUNDING BACKFILL.

ALL STRAPPING AND TOP 2/3 OF WIRE BASKET MUST BE CUT AWAY AND REMOVED FROM ROOT BALL PRIOR TO BACKFILLING PLANTING PIT. REMOVE TOP 1/3 OF THE BURLAP FROM ROOT BALL.

FOR NEW PLANTING AREAS, REMOVE ALL PAVEMENT, GRAVEL SUB-BASE AND CONSTRUCTION DEBRIS; REMOVE COMPACTED SOIL AND ADD 24" NEW TOPSOIL OR UNCOMPACT AND AMEND THE TOP 24" OF EXISTING SOIL TO MEET TOPSOIL PLANTING MIX STANDARDS FOR TREES. SEE DETAILS THIS SHEET.

THE CONTRACTOR SHALL BE RESPONSIBLE FOR INSTALLING TREES AND SHRUBS THAT WILL MEET BOTH MINIMUM SIZE AND SPACING FOR TREE AND ZONING ORDINANCE COMPLIANCE. FAILURE TO INSTALL PLANT MATERIAL PER THIS PLAN WILL JEOPARDIZE ISSUANCE OF FINAL CERTIFICATE OF OCCUPANCY. CONTRACTOR SHALL BE RESPONSIBLE FOR SCHEDULING INSPECTIONS OF PLANT MATERIAL.

CONTRACTOR SHALL COMPLY WITH ALL APPLICABLE CODES & ORDINANCES REGARDING LANDSCAPING. GENERAL CONTRACTOR IS TO CLEAN THE ENTIRE SITE OF ALL CONSTRUCTION DEBRIS AND TO RAKE ENTIRE SITE.

CONTRACTOR SHALL ROTOTILL TOP 3" OF SOIL AND REMOVE ALL ROCKS 1" DIAMETER OR GREATER.

TOWN OF WAKE FOREST LANDSCAPE NOTES:

TREE SHOULD BE PLANTED SO THAT ROOT FLARE IS AT GRADE AND NO MORE THAN 2" ABOVE GRADE

APPLY 3 INCH AVERAGE THICKNESS OF SHREDDED HARDWOOD MULCH EXTENDING 12 INCHES BEYOND THE EDGE OF PLANTING PIT OR TRENCH. DO NOT PLACE MULCH WITHIN 3 INCHES OF TRUNKS OR STEMS. ROOT FLARE SHALL BE VISIBLE AT BASE OF ALL PLANT MATERIAL.

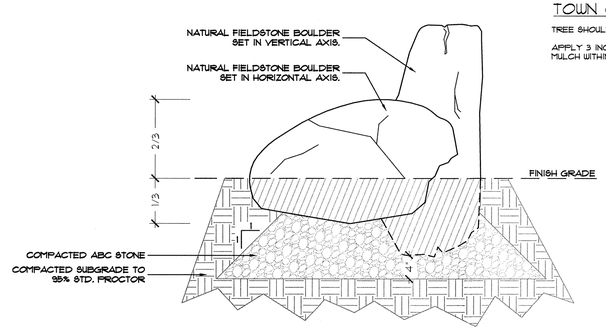

NOTES:

1. GROUP BOULDERS IN A NATURAL SETTING - SIMILAR TO AN EXPOSED ROCK OUTCROP.
2. INSURE BOULDER SET IN VERTICAL AXIS RESTS AGAINST MINIMUM ONE (1) BOULDER SENT IN HORIZONTAL AXIS FOR ADDITIONAL SUPPORT.
3. VARY ORIENTATION AMONG GROUPS.
4. SUBMIT DIGITAL PHOTOGRAPHS OF BOULDER DEPICTING COLOR RANGE, SHAPE, CHARACTER AND SIZE.
5. NOTIFY PROJECT LANDSCAPE ARCHITECT MINIMUM 48 HOURS PRIOR TO SETTING BOULDERS FOR FIELD GUIDANCE.

5 / L2.0 BOULDER SETTING

SECTION
SCALE: 1"=1'-0"

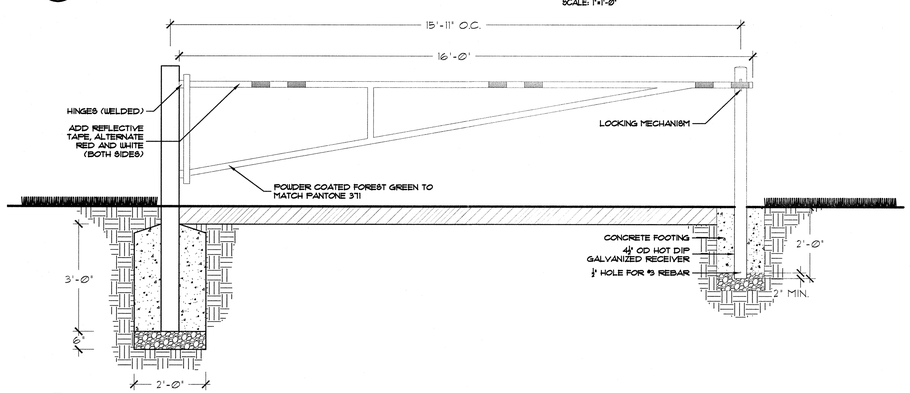

6 / L2.0 STEEL VEHICULAR GATE

PLAN & SECTION
SCALE: 1/2"=1'-0"

THESE PLANS HAVE BEEN APPROVED FOR CONSTRUCTION BY THE TOWN OF WAKE FOREST.

Holly E. Niller	7-2-15
ENGINEERING DEPARTMENT	DATE
–	
PUBLIC WORKS DEPARTMENT	DATE
Holly E. Niller	7-2-15
EROSION & SEDIMENT CONTROL	DATE
–	
FIRE PREVENTION	DATE
–	
ACCESSIBILITY	DATE
Candace R. Davis	7/14/15
PLANNING DEPARTMENT	DATE
Jennifer Shall	7/7/15
URBAN FORESTER	DATE
CITY OF RALEIGH PUBLIC UTILITIES DEPARTMENT	DATE

ALL PUBLIC FACILITIES, INCLUDING UTILITIES, SIDEWALKS, AND HANDICAP RAMPS ARE TO BE CONSTRUCTED ON ALL STREETS AS SPECIFIED BY TOWN STANDARDS. THESE FACILITIES HAVE BEEN APPROVED BY THE TOWN OF WAKE FOREST AND SHALL BE SO INSTALLED UNLESS A CHANGE IS APPROVED BY THE TOWN OF WAKE FOREST.

EXECUTION OF THIS CONSTRUCTION PLAT BY THE REVIEW ENGINEER FOR THE TOWN OF WAKE FOREST IN NO WAY LIMITS THE RESPONSIBILITY OF THE OWNER AND ENGINEER OF RECORD WITH REGARD TO COMPLIANCE WITH ALL FEDERAL, STATE, AND LOCAL STANDARDS AND/OR CONDITIONS.

OWNER HEREBY CERTIFIES AND AGREES TO TAKE SUCH ACTION AS MAY BE REQUIRED BY THE TOWN OF WAKE FOREST TO CORRECT ANY ERRORS, OMISSIONS OR NON-COMPLIANCE WITH TOWN STANDARDS AND/OR CONDITIONS DESCRIBED IN THIS CONSTRUCTION PLAT, INCLUDING RE-SUBMISSION OR RE-EXECUTION OF THIS CONSTRUCTION PLAT WITH THE APPROPRIATE CORRECTIONS AND/OR REVISIONS.

No.	REVISIONS	DATE	BY

Kimley»Horn

© 2015 KIMLEY-HORN AND ASSOCIATES, INC.
333 FAYETTEVILLE STREET, SUITE 600, RALEIGH, NC 27601
PHONE: 919-835-1494
WWW.KIMLEY-HORN.COM
NC LICENSE # F-0102

KHA PROJECT	011311036
DATE	6/24/15
SCALE	AS SHOWN
DESIGNED BY	BPW
DRAWN BY	BNR
CHECKED BY	BPW

WAKE FOREST NC

LIGON MILL TRAILHEAD

PREPARED FOR

TOWN OF WAKE FOREST

NORTH CAROLINA PROFESSIONAL SEAL 1625 ENGINEER BRANDON PHILLIP WHITE
8.24.2015

LANDSCAPE AND HARDSCAPE DEATILS BURLINGTON MILLS RD

SHEET NUMBER

L2.0

Plotted By:Roy, Bethany Sheet Set:Ligon Mill Trailhead Layout:L2.0 LANDSCAPE AND HARDSCAPE DEATILS BURLINGTON MILLS RD June 24, 2015 03:46:36pm K:\RDT_LDEV\011311036_town-ligon_mill_trailhead\planning phase\p15_cad files\PlanSheets\L2.0 LANDSCAPE AND HARDSCAPE DEATILS BURLINGTON MILLS RD.dwg
This document, together with the concepts and designs presented herein, as an instrument of service, is intended only for the specific purpose and client for which it was prepared. Reuse of and improper reliance on this document without written authorization and adaptation by Kimley-Horn and Associates, Inc. shall be without liability to Kimley-Horn and Associates, Inc.